Components for modular microwave transverters

Wolf-Henning Rech

DF9IC in JN48iw

http://www.df9ic.de

Content

- Multiband transverter systems
- Filters and multiplexers
- PLL-disciplined oscillators
- Transverters
- 2320 MHz transverter core
- 5760 MHz transverter core
- Further modules (planned)
- Conclusion

Multiband TVTR systems

- Multiband transverter systems
- Filters and multiplexers for multiband operation
- PLL-disciplined oscillators
- Transverters
- 2320 MHz transverter core
- 5760 MHz transverter core
- Further modules (planned)
- Conclusion

Single band transverter

- Single band single box transverter: all you need in one box, plus an external low gain PA

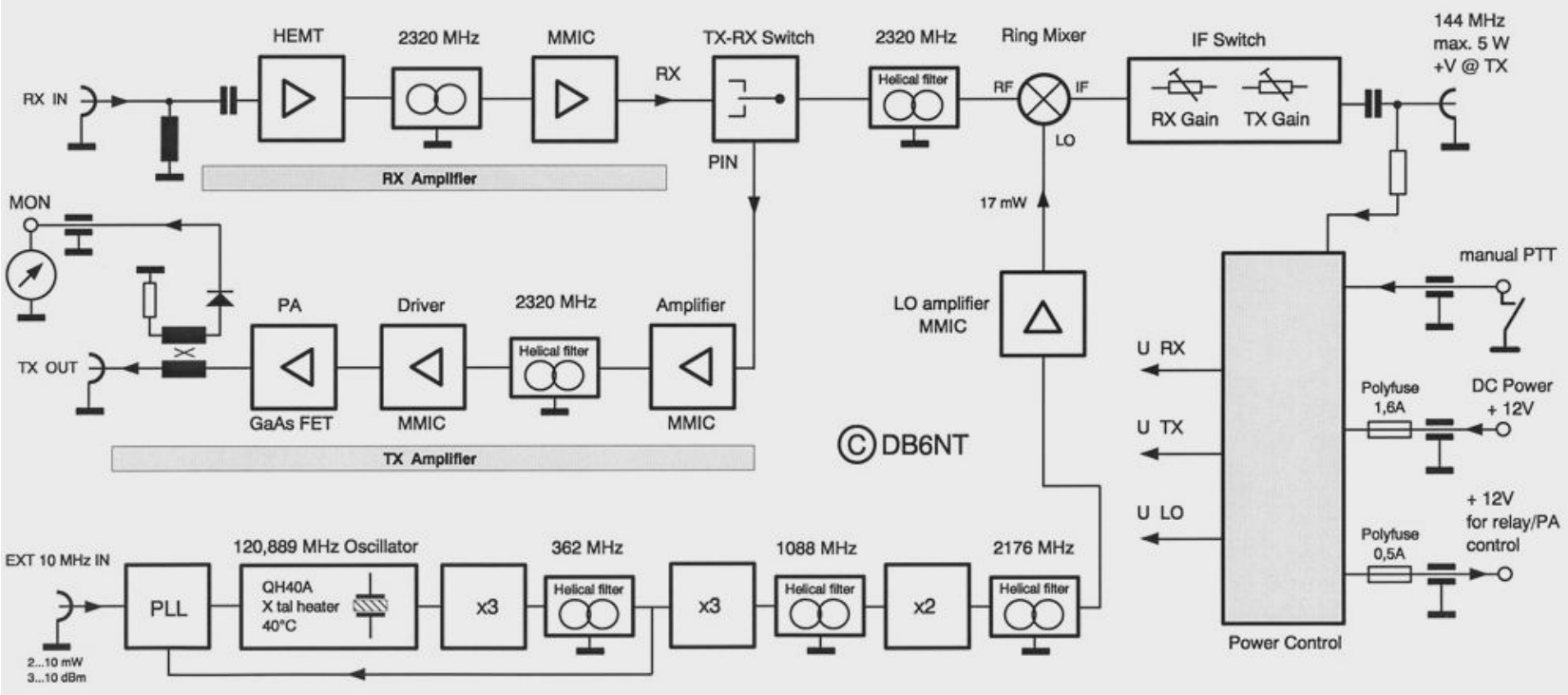

Multiband TVTR example 1

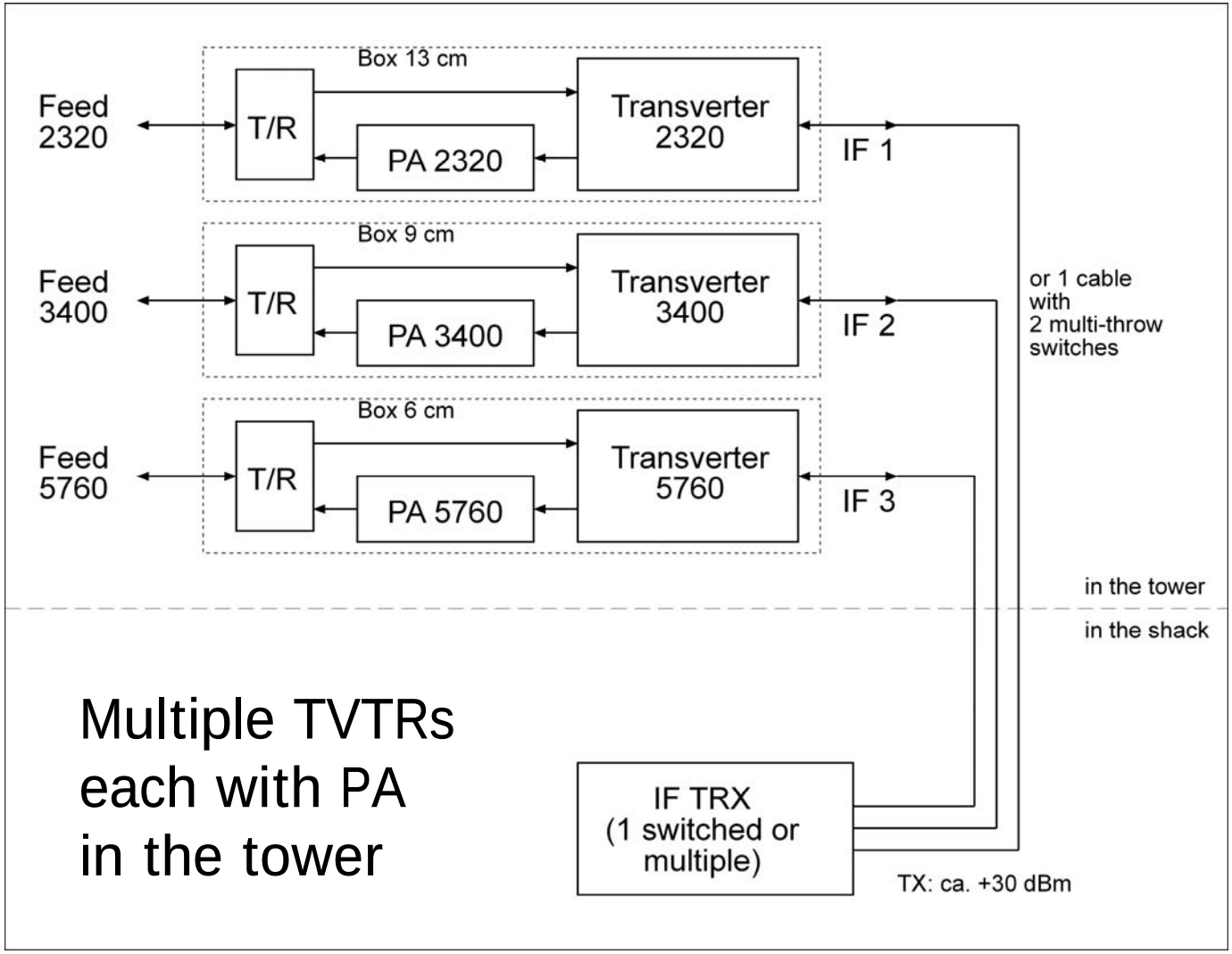

Multiple TVTRs each with PA in the tower

Multiband TVTR example 2

Multiband TVTR with PAs in the shack, RX preamps in the tower.

Wideband feedhorn.

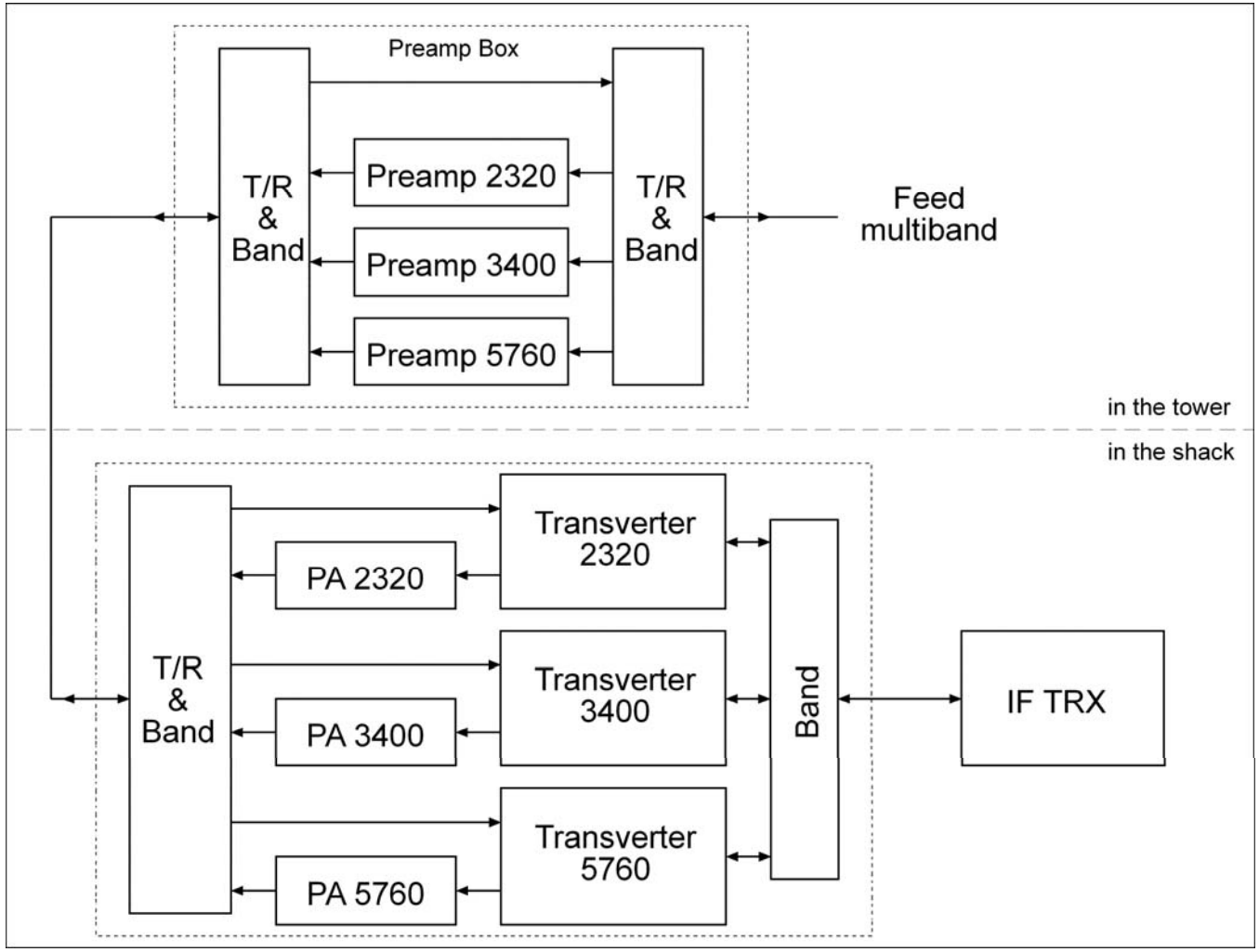

Shack or Tower – what goes where?

- RX preamp and T/R-switch:
  - in the tower or even in the feed
- PA and PSU:
  - Solid state PA in the tower, PSU in the tower or shack
  - TWT in the shack/attic oder in the tower
  - Drive power typically 0...+10 dBm
- Transverter:
  - in the shack: environmentally stable, vibration free, easily accessible for service, 10 MHz easily available

DF9ICs planned multiband TVTR

Multiband TVTR in the shack, all PAs and RX preamps in the tower

One coaxial cable + one DC cable to the tower

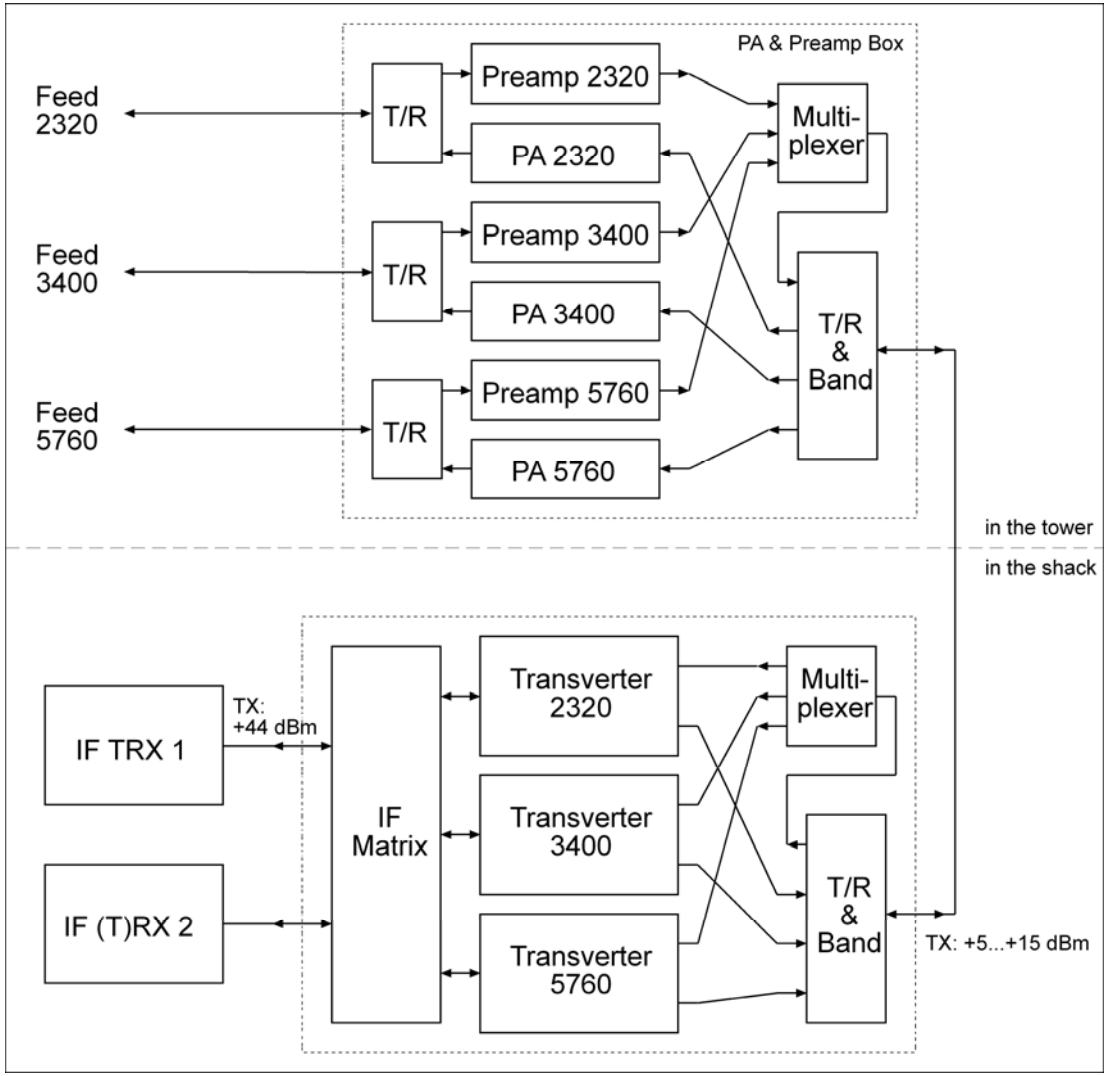

Requirements for the TVTR core

- RX amp: low gain and sensitivity
- TX amp: low output power (+5...+15 dBm)
- LO:
  - Low spurii and low noise
  - 10 MHz input for OCXO/GPS lock
- IF interface:
  - Switcheable to each band
  - IF TX power up to 25/50 W
  - 2 RXs in same or on different bands

Content

- Multiband transverter systems
- Filters and multiplexers
- PLL-disciplined oscillators
- Transverters
- 2320 MHz transverter core
- 5760 MHz transverter core
- Further modules (planned)
- Conclusion

Multiplexer for 23/13/9/6 cm

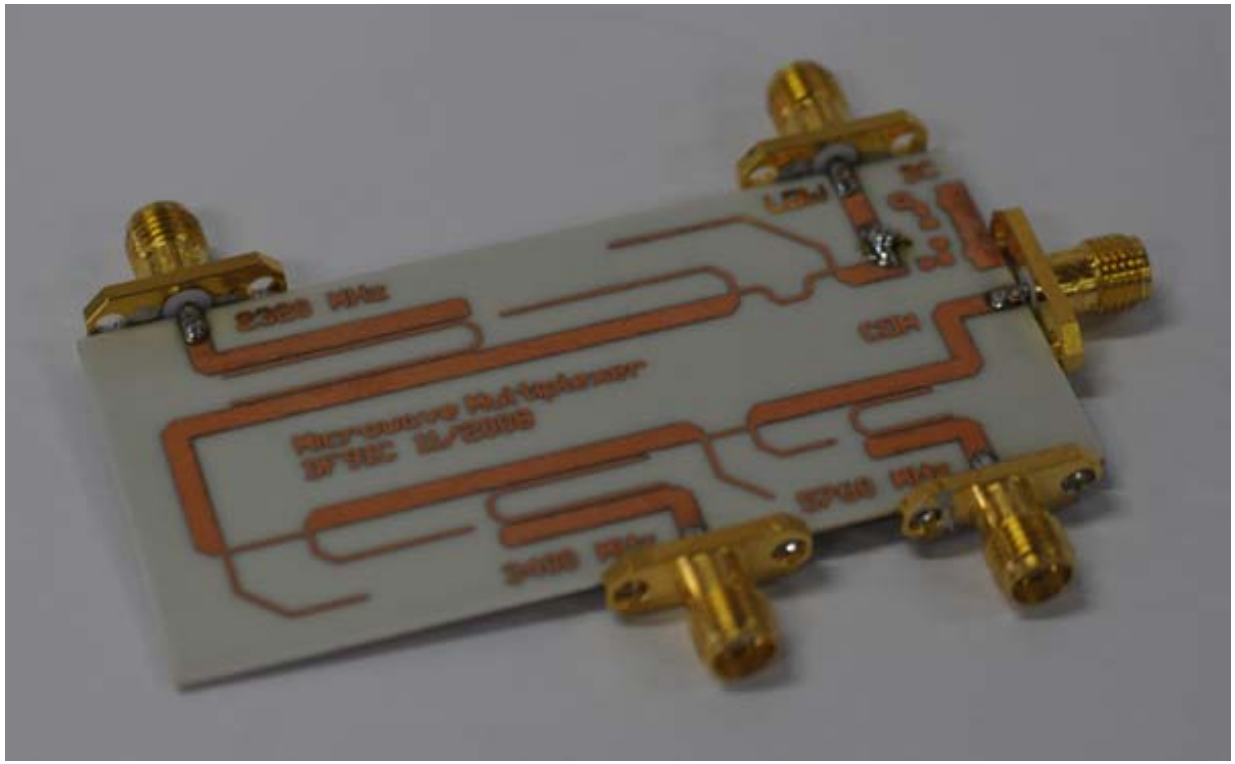

Multiplexer?

- Several microwave signals over one cable at the same time
- 23 cm, 13 cm, 9 cm, 6 cm
- RX or low power TX (<1 W)
- Decent insertion loss (ca. 1 dB) and isolation (>20 dB)
- Microstrip on RO4003 substrate, e. g. no-tune
- For use in multiband TVTR systems

Multiplexer: possible structures

- Star topology: difficult

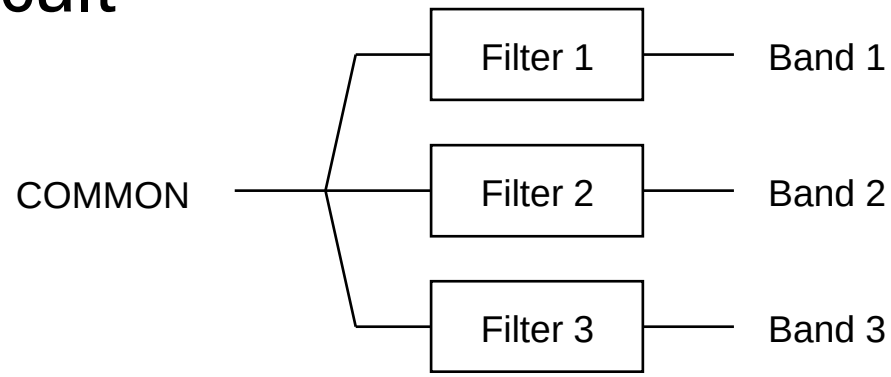

- Cascaded drop filter topology:

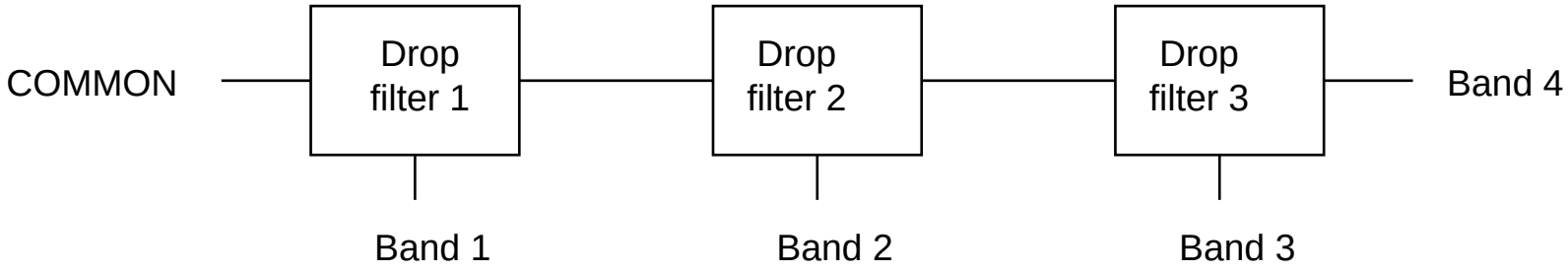

Multiplexer: basic element

- Bandpass drop and lowpass through

Multiplexer: PCB layout

- 3 elements cascaded and folded

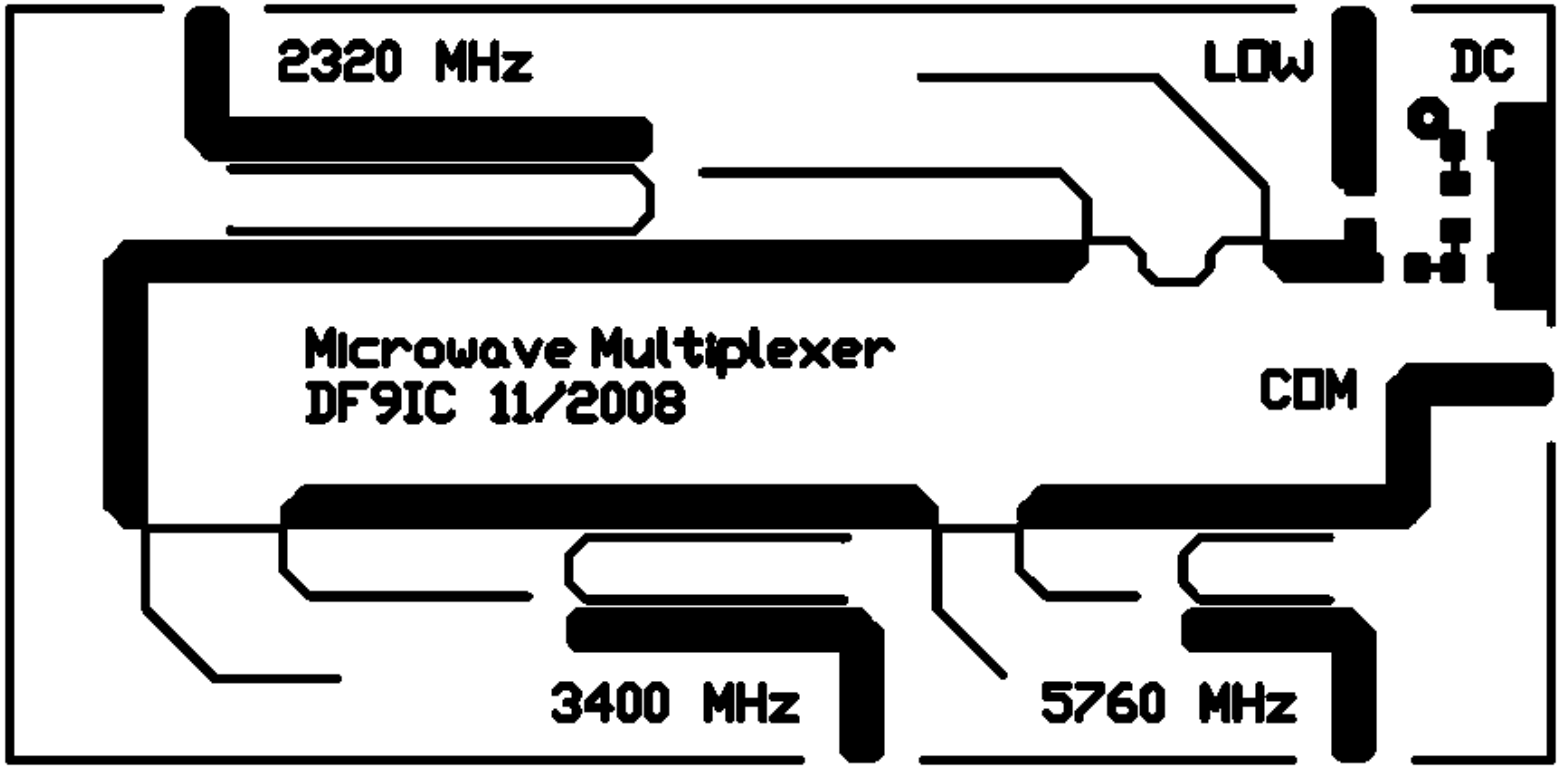

Multiplexer: optional Bias-T

- application:

  signalling or telemetry

  (only small currents !)

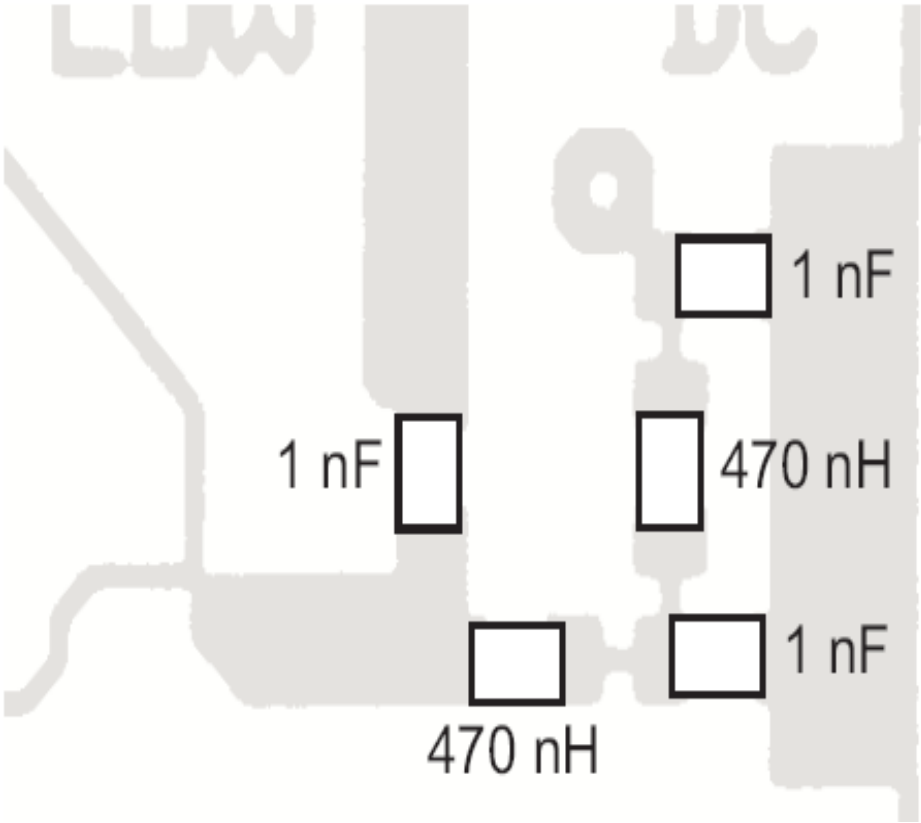

Multiplexer: bandpass 5760 MHz

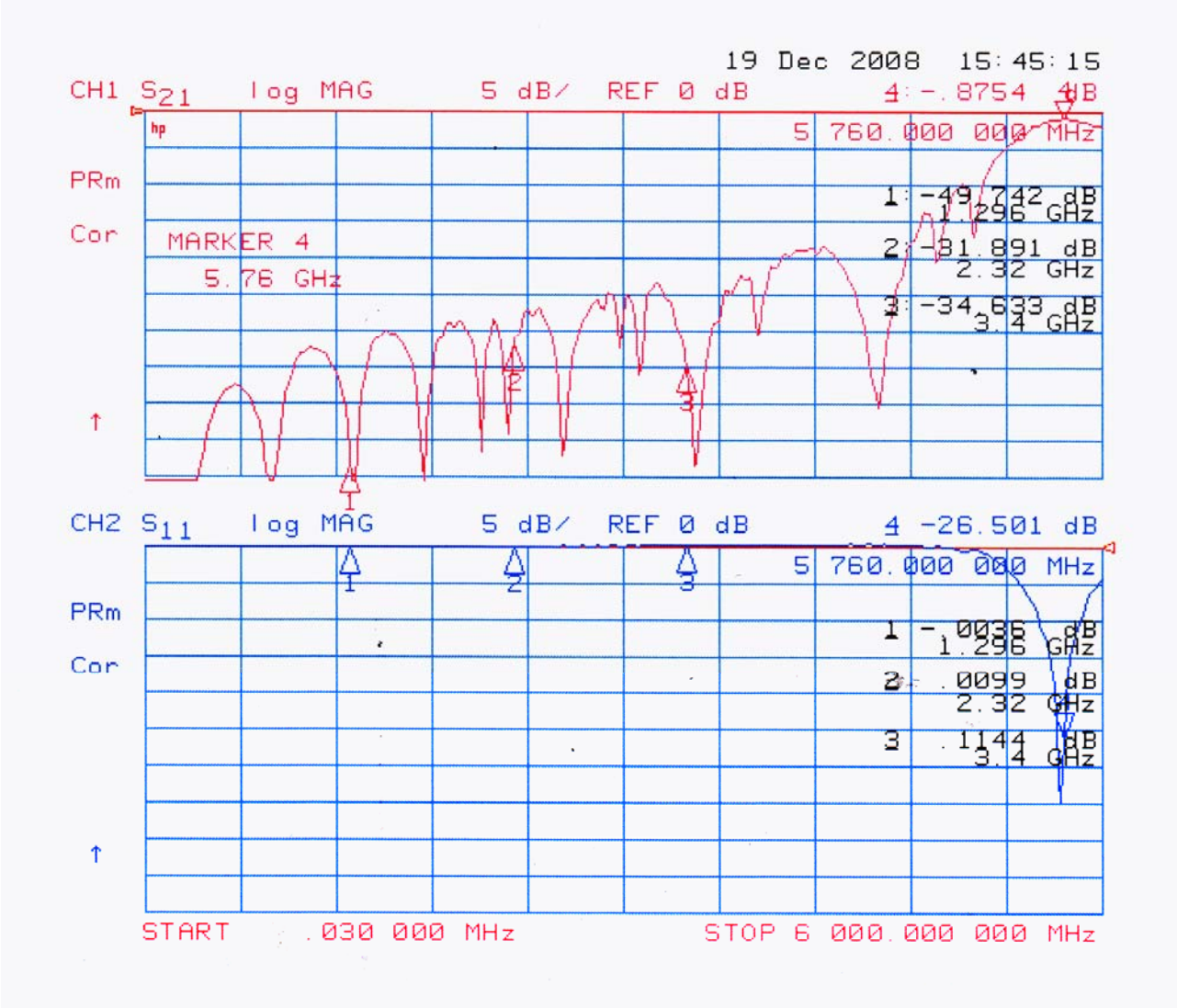

Multiplexer: bandpass 3400 MHz

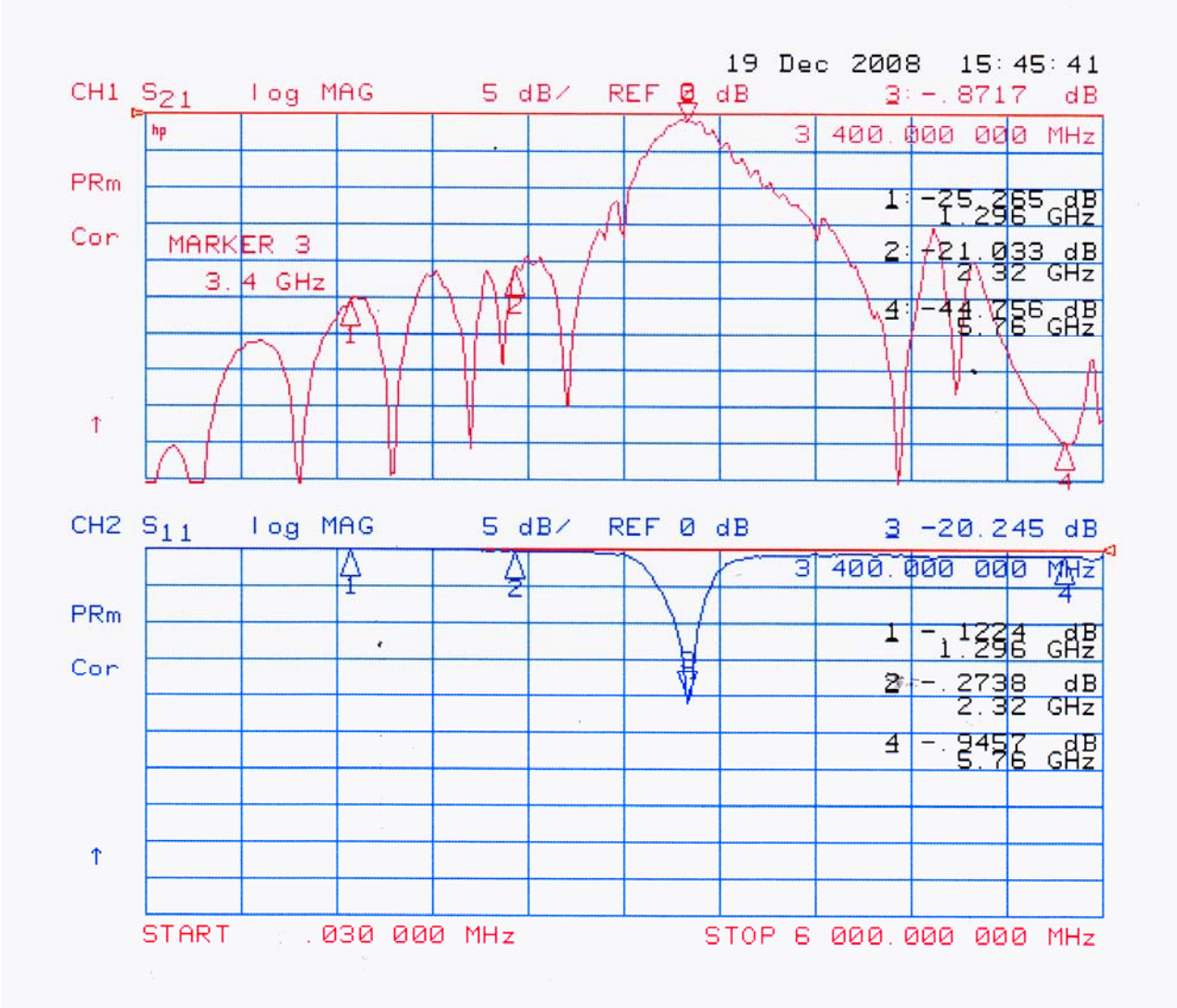

Multiplexer: bandpass 2320 MHz

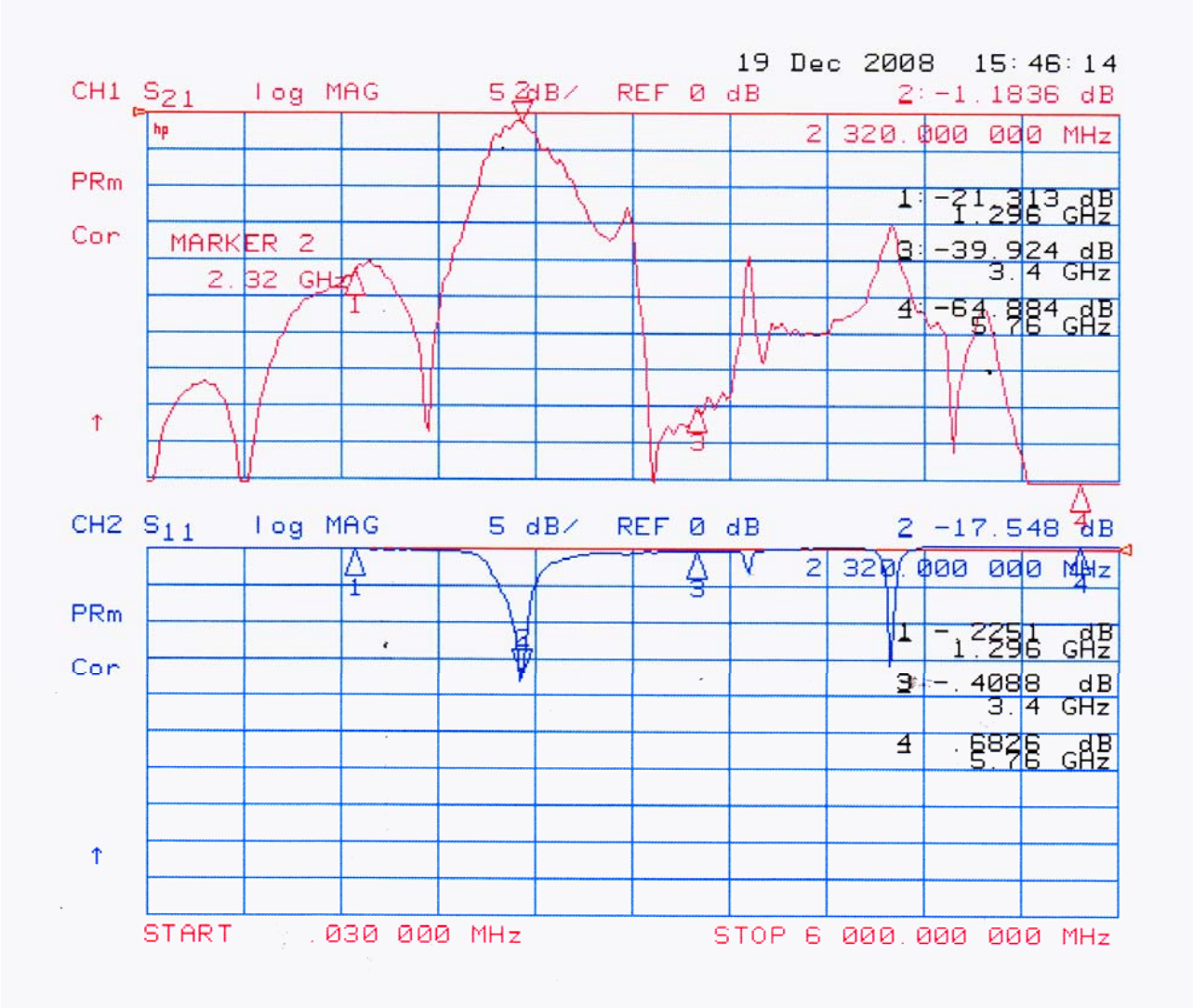

Multiplexer: lowpass 1296 MHz

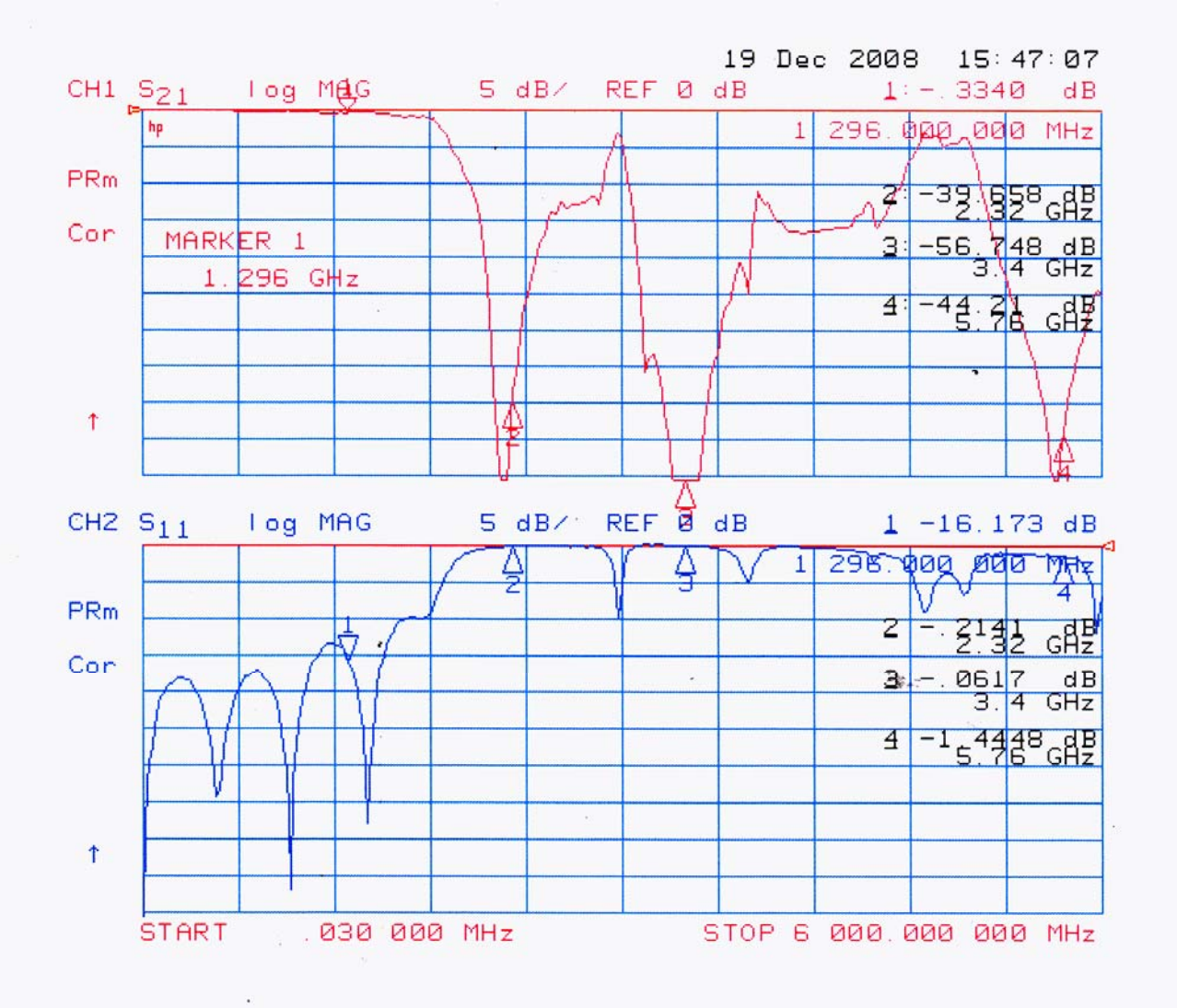

More microstrip filters designs

- No-tune filters for simultaneous operation on 1296 and 2320 with dual band feed
  - Lowpass filter 1296 MHz with bandstop 2320 MHz
  - Highpass filter 2320 MHz (needs discrete capacitors)
  - Alternate solution: Bandstop filter 1296 MHz with bandpass 2320 MHz
- Printed microstrip on RO4003 substrate
- Can be used for RX or low power (10 W) TX

Lowpass 1296 with bandstop 2320

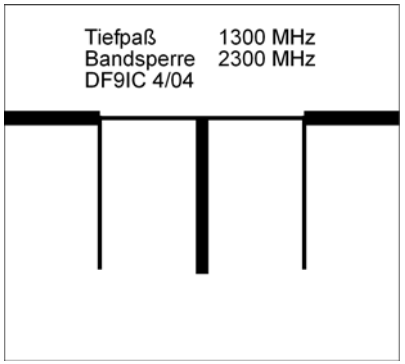

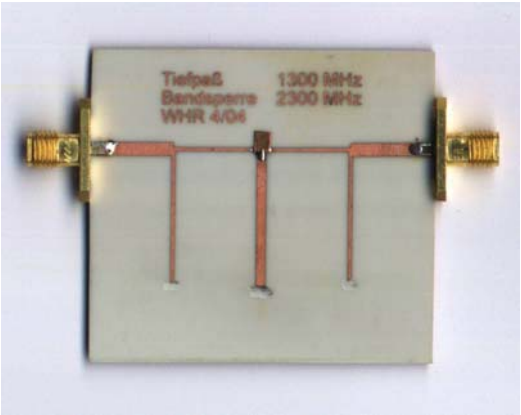

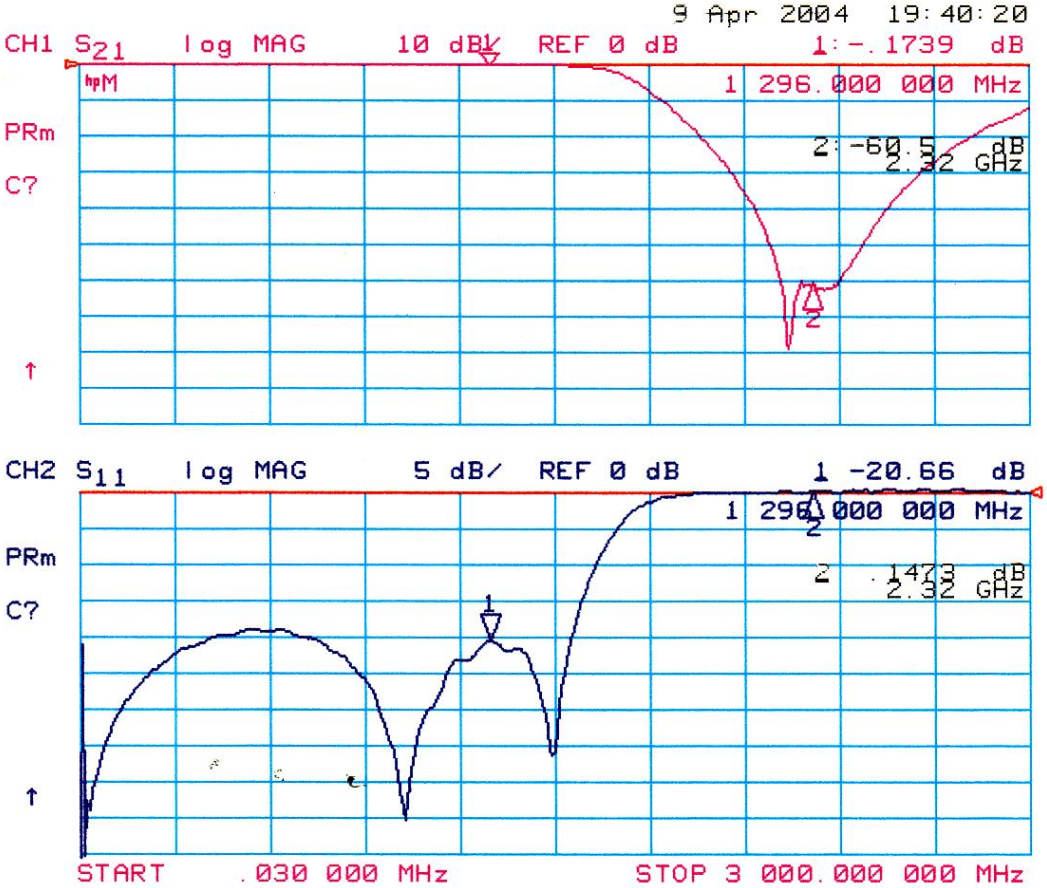

Highpass 2320

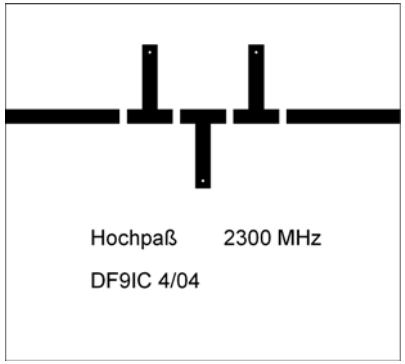

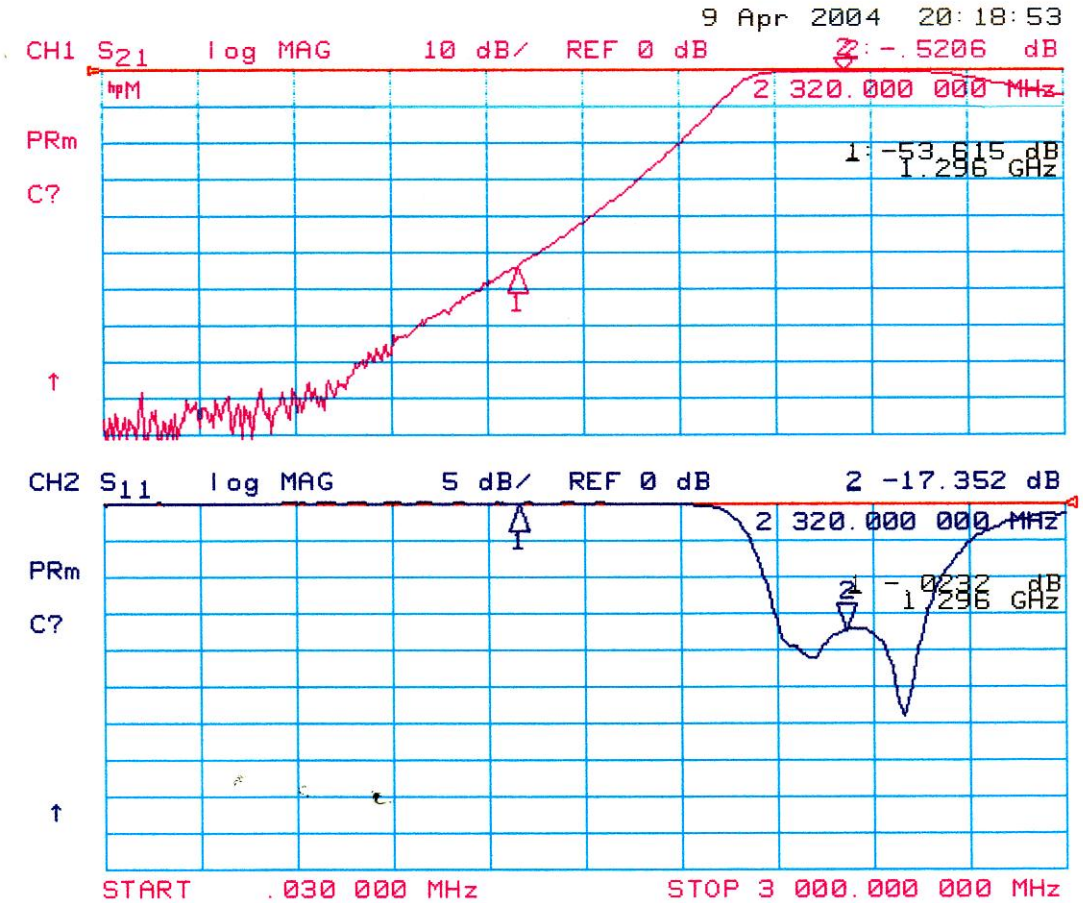

Bandstop 1296 with bandpass 2320

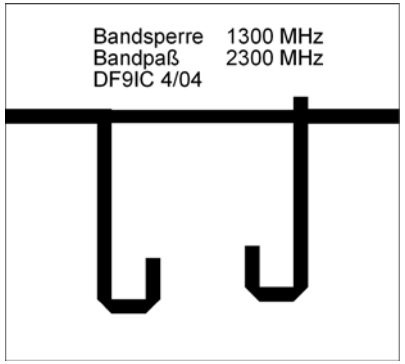

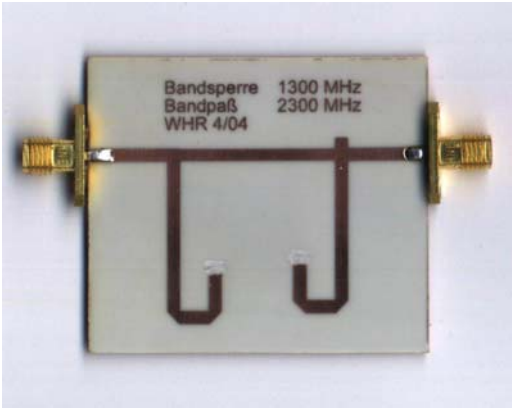

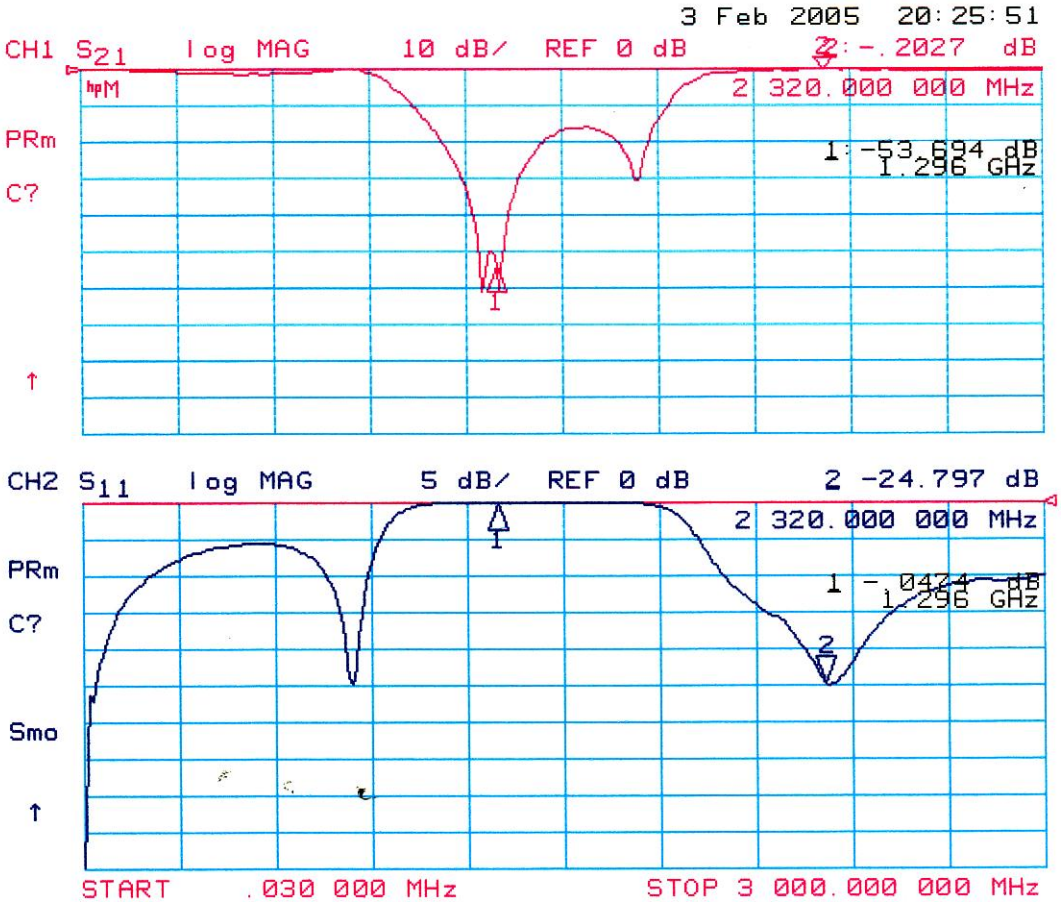

Content

- Multiband transverter systems
- Filters and multiplexers
- PLL-disciplined oscillators
- Transverters
- 2320 MHz transverter core
- 5760 MHz transverter core
- Further modules (planned)
- Conclusion

Precise frequency helps for QSOs

- How much do we need for a sked?
  - 1296 MHz: 10^{-7} means 130 Hz error
  - 10 GHz: 10^{-8} means 100 Hz error
  - 122 GHz: 10^{-9} means 120 Hz error
- Various levels of temperature stability:
  - XO: 10^{-5} ... 10^{-6}
  - Amateur VHF OCXO: 10^{-6} ... 10^{-7}
  - Professional OCXO: 10^{-7}... 10^{-10}
- Ageing: about 10^{-7} ... 10^{-8} per year

Frequency standards available

commercial surplus GPS disciplined standard,
e. g.. HP Z3801A

also Rb standards

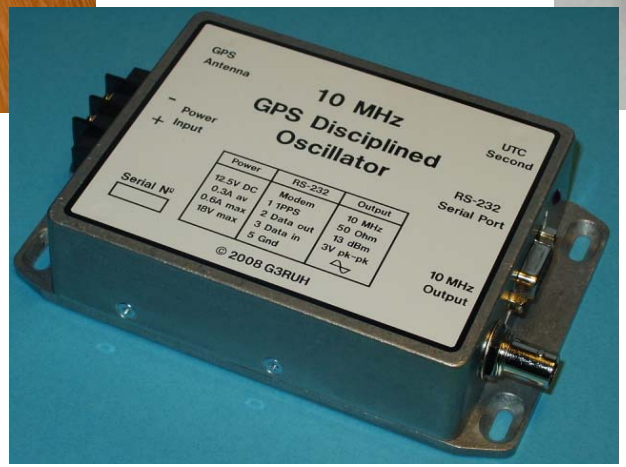

Amateur GPS disciplined standard, e. g.. G3RUH

OCXOs (standalone for portable operation

10 MHz distribution amplifier

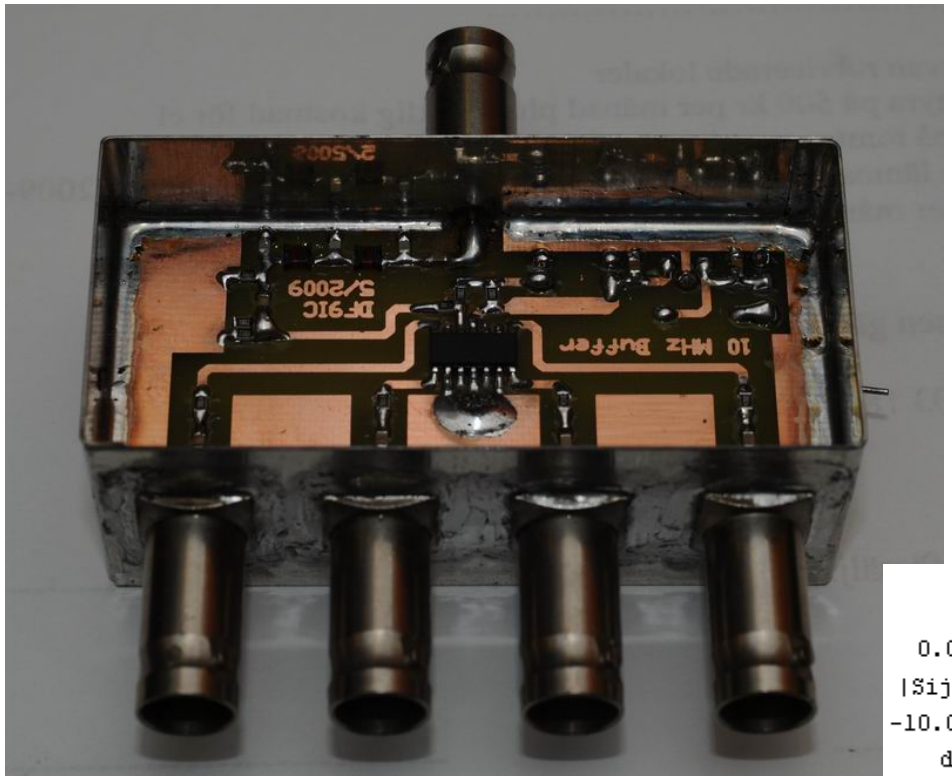

MAX 4022 (quad video buffer) with lowpass filter at the input

5 V regulator included, max. 100 mA

Input/output 50 Ohm @ max. +5 dBm

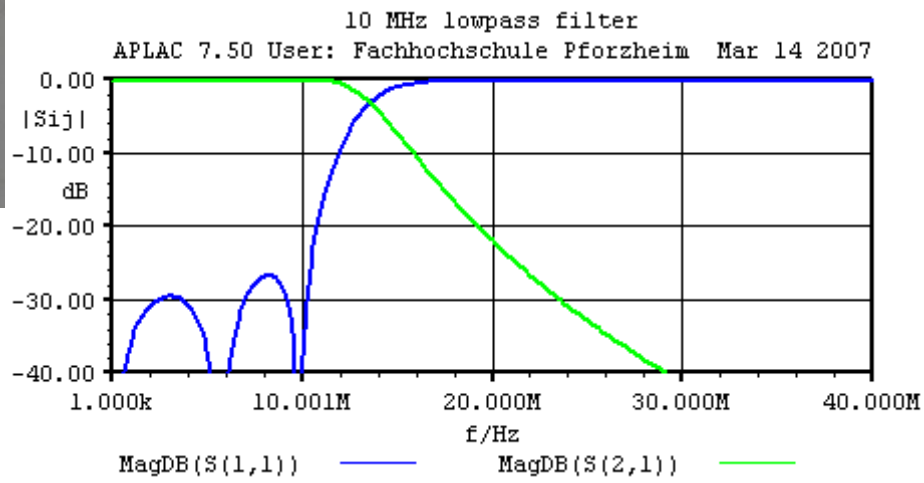

Retrofit of existing transverters

- Standard LO chain

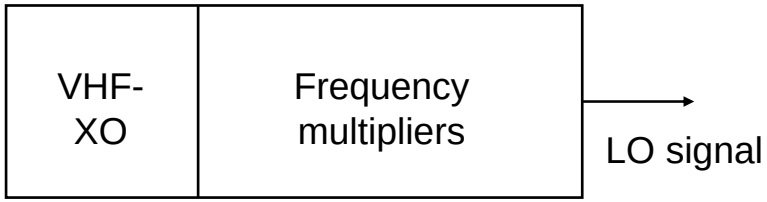

- with OCXO

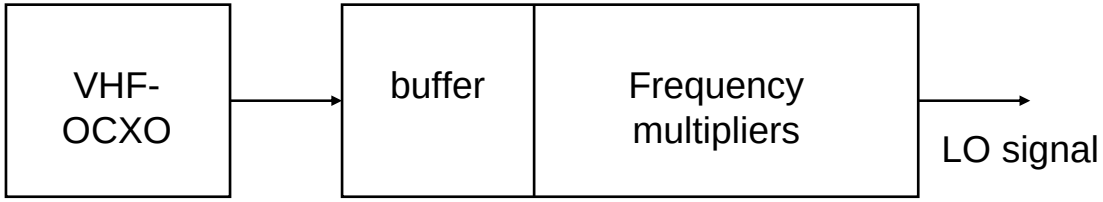

- with PL-VCXO

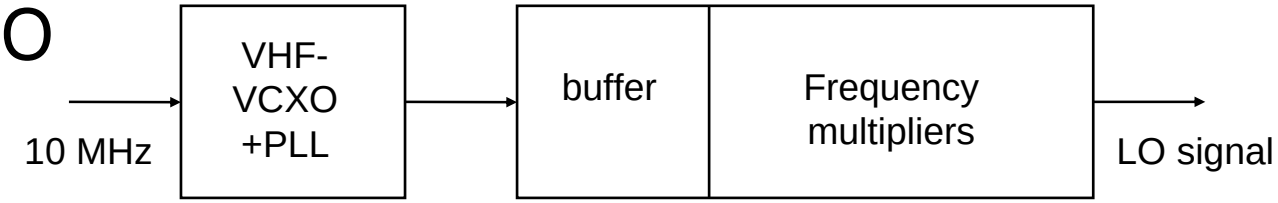

Phase-locked VCXO (PL-VCXO)

- Short term stability (phase noise) of ordinary crystal oscillator
- Long term stability determined by external frequency standard
- Tuning range of VCXO must be sufficient to compensate temperature influence and ageing

Basic XO circuit

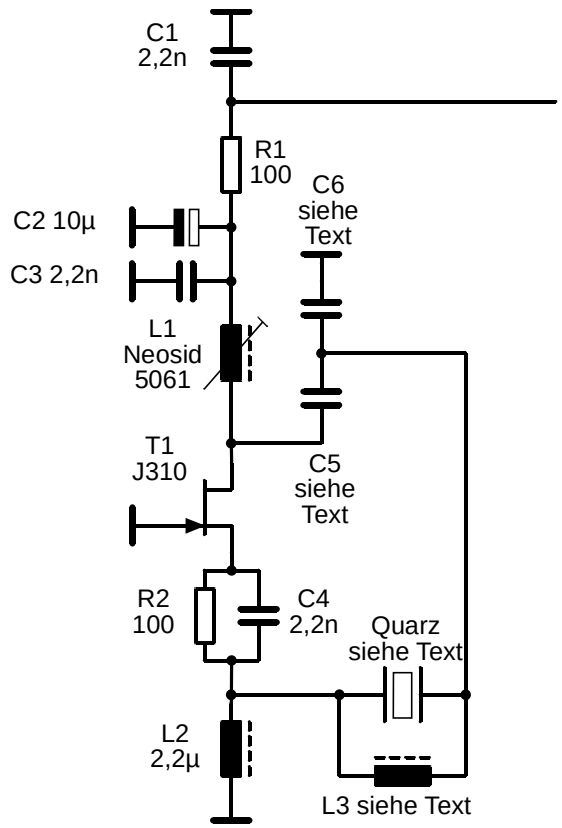

Similar to DB6NT XO and others:

- RC lowpass in the supply voltage filters voltage regulator noise
- Careful compensation of the static capacitance of the crystal is needed

Now we add the tuning network and a buffer stage

VCXO circuit

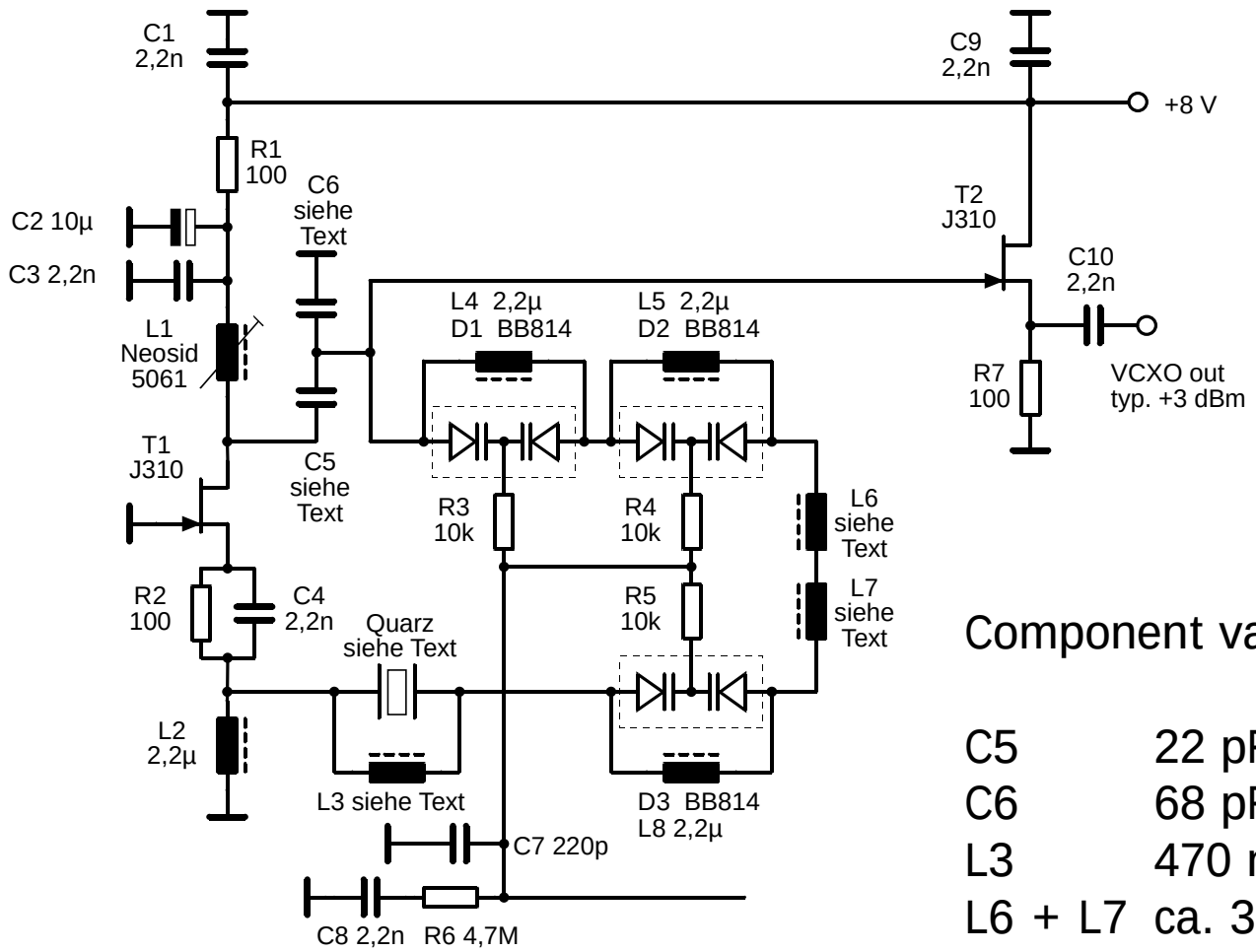

Component values for 100 MHz:

C5	22 pF
C6	68 pF
L3	470 nH
L6 + L7	ca. 300 nH (total)

Varicaps

BB814

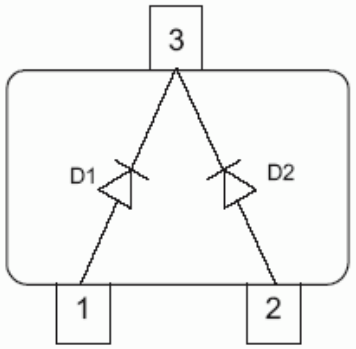

Twin varicap for FM radios

Diode capacitance $C_T = f\ (V_R)$

f = 1MHz

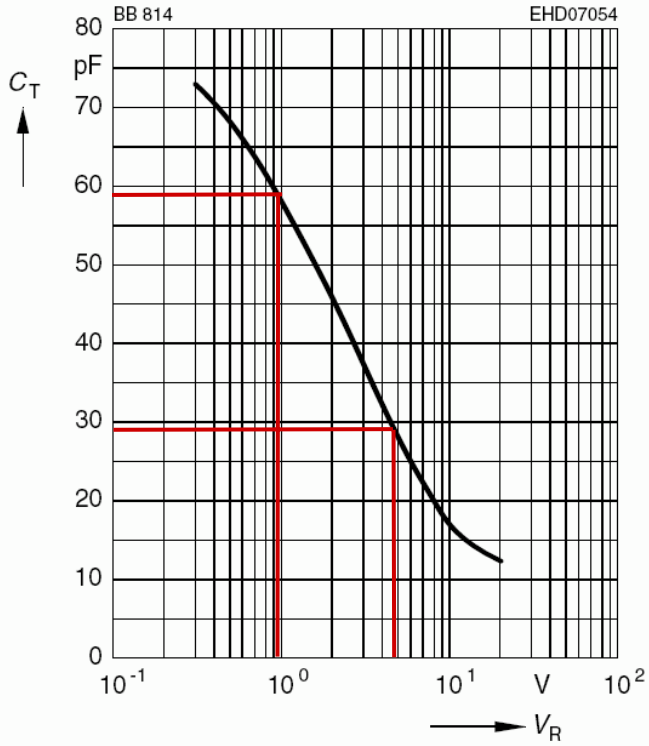

Transfer function tuned crystal

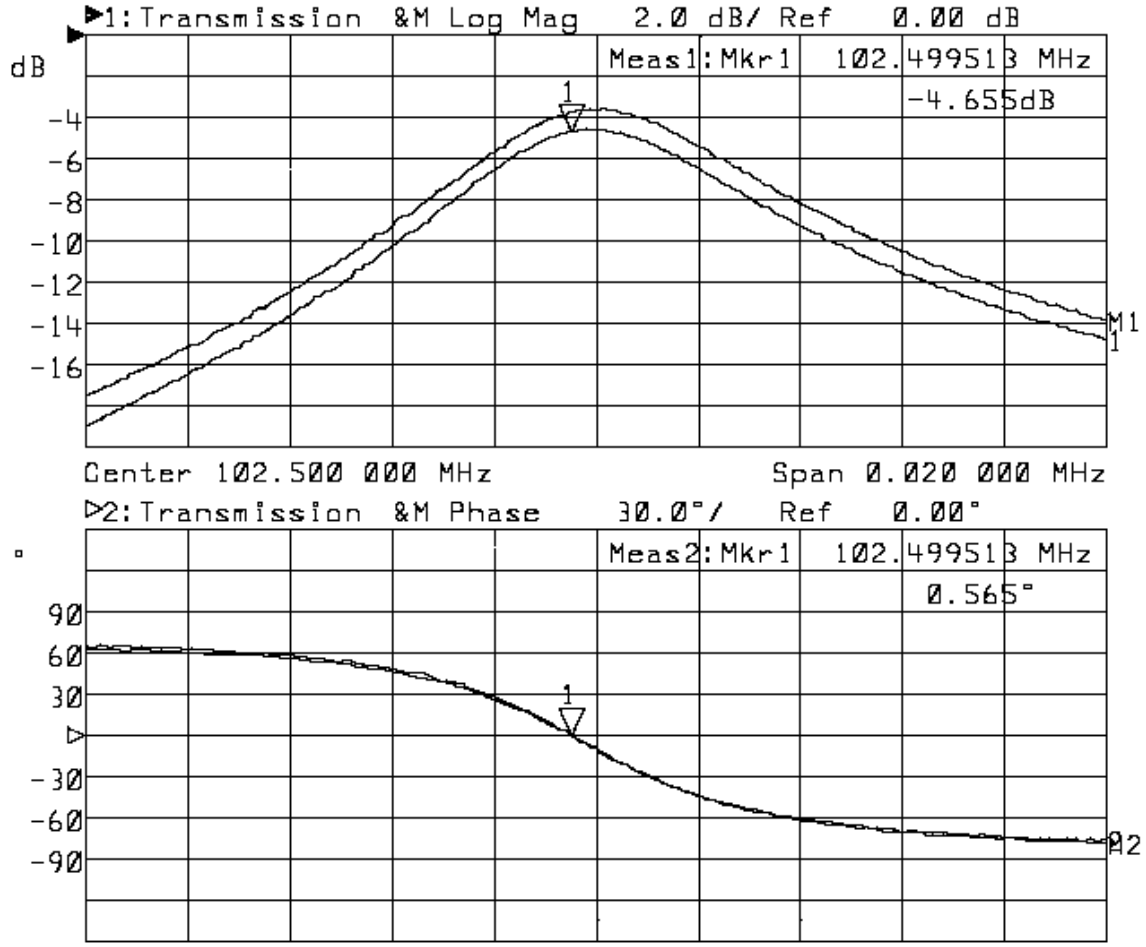

U_a = 2,5 V

Transfer function tuned crystal

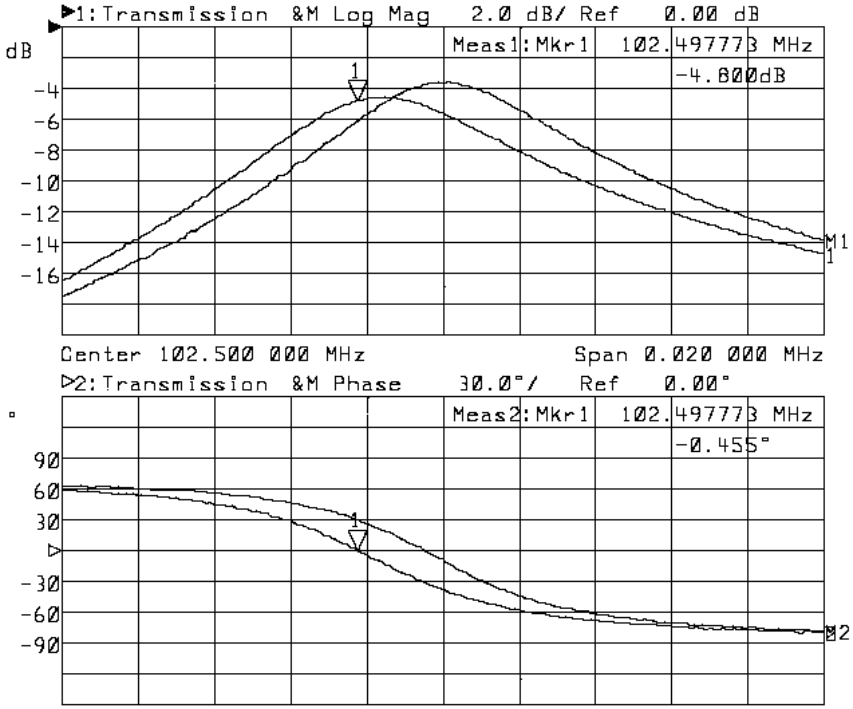

U_a = 0,5 V

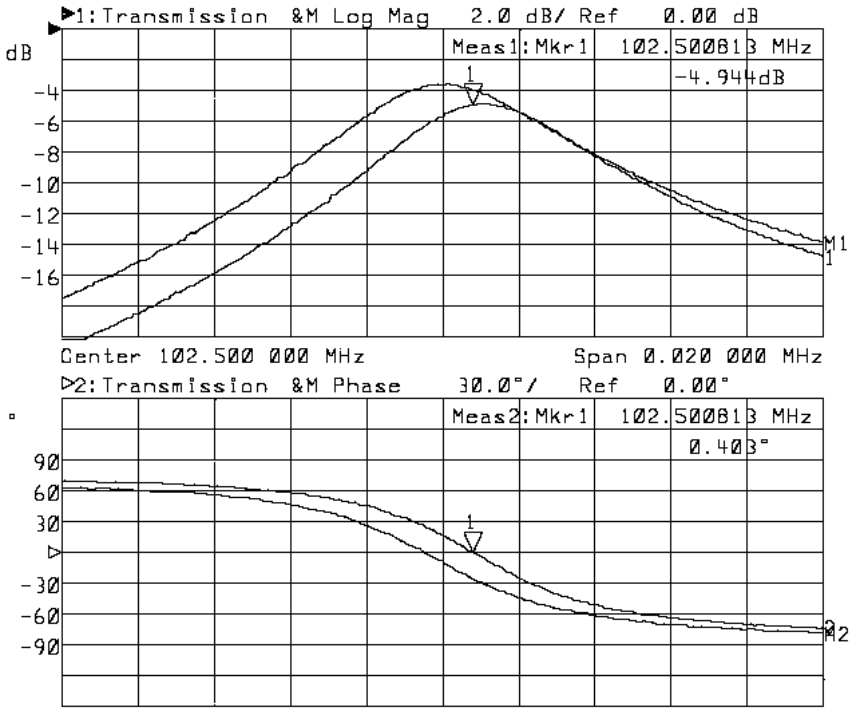

U_a = 4,5 V

Oscillator tuning (f_0=100 MHz)

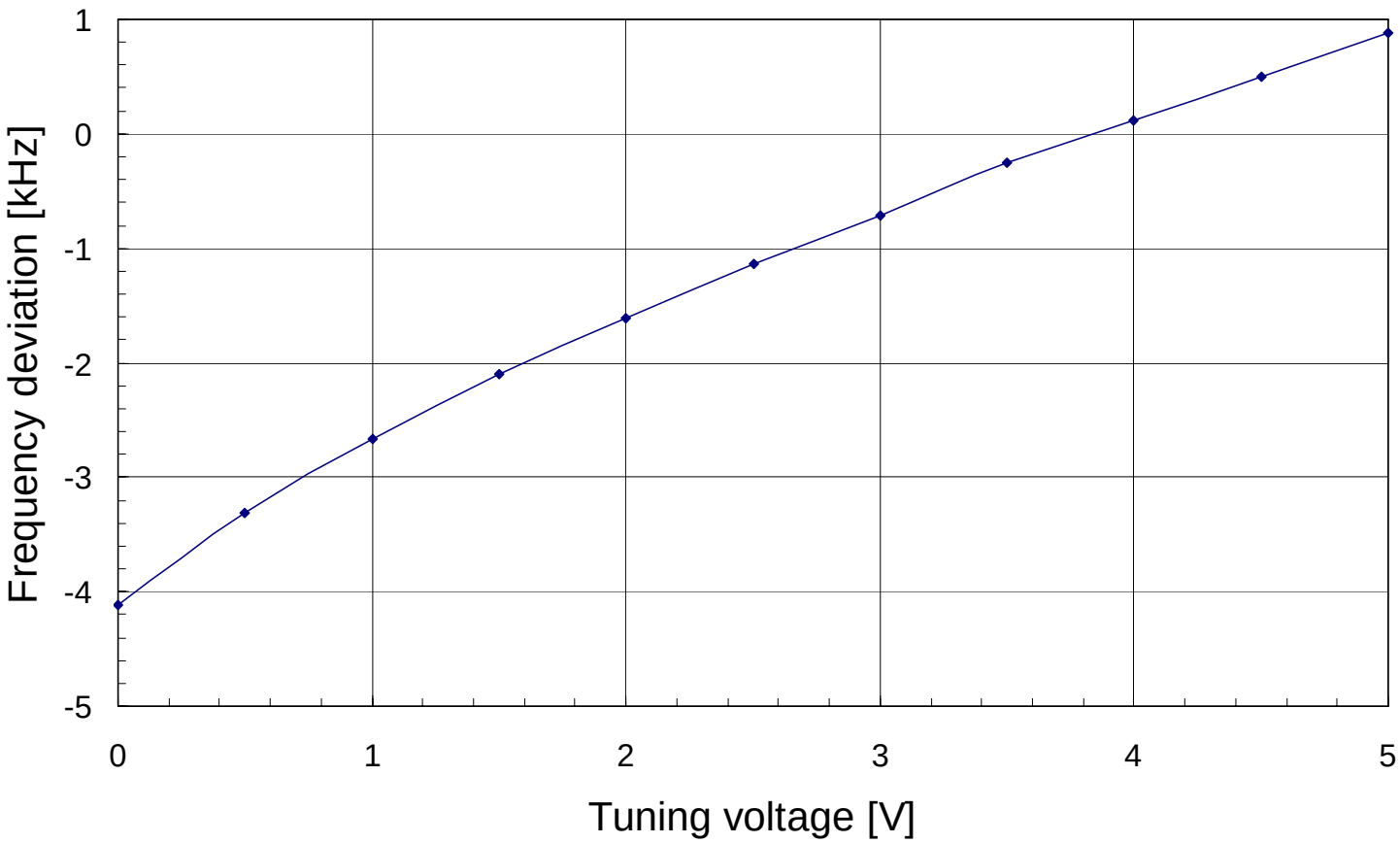

Integrated PLL circuit

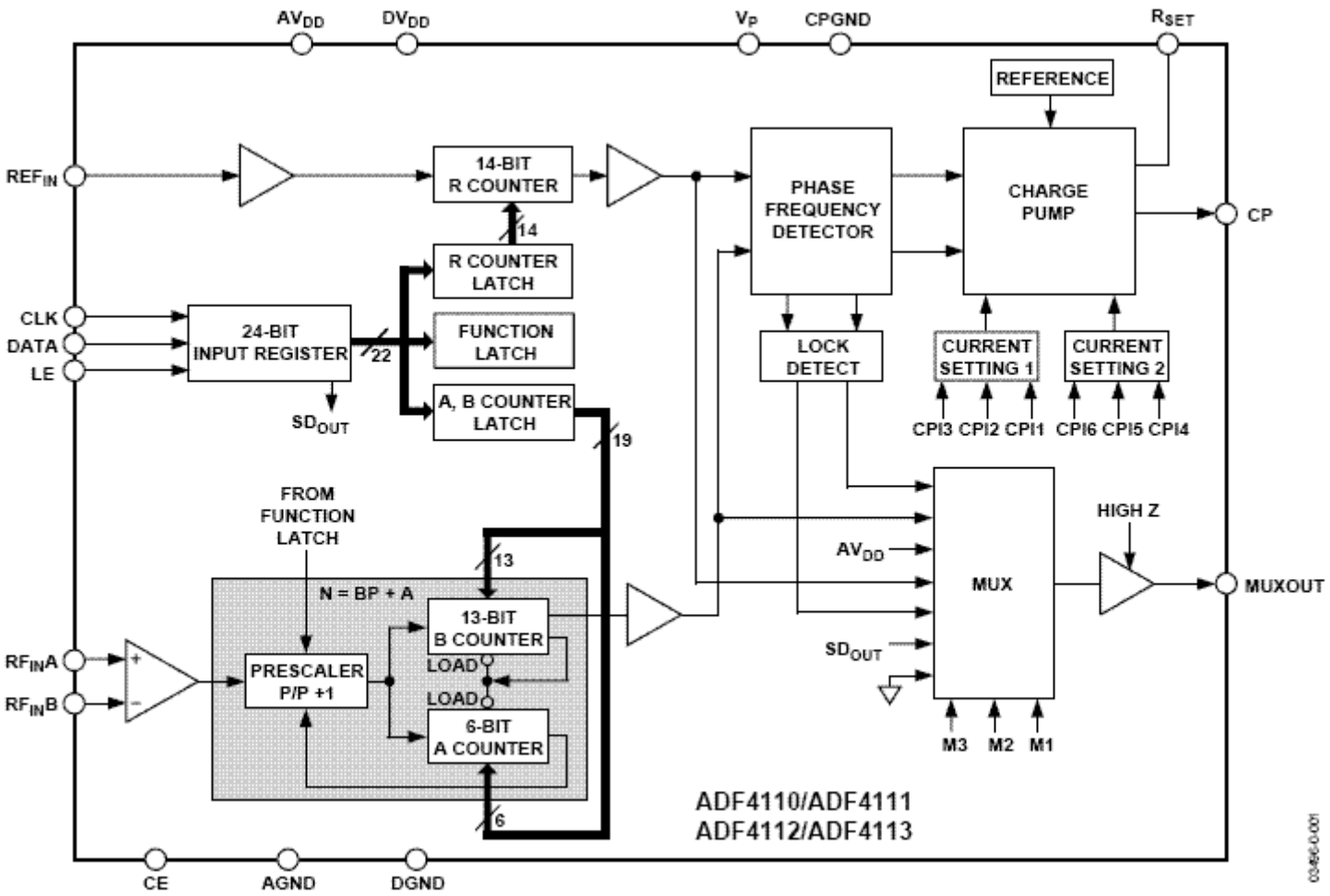

Complete circuit of PL-VCXO

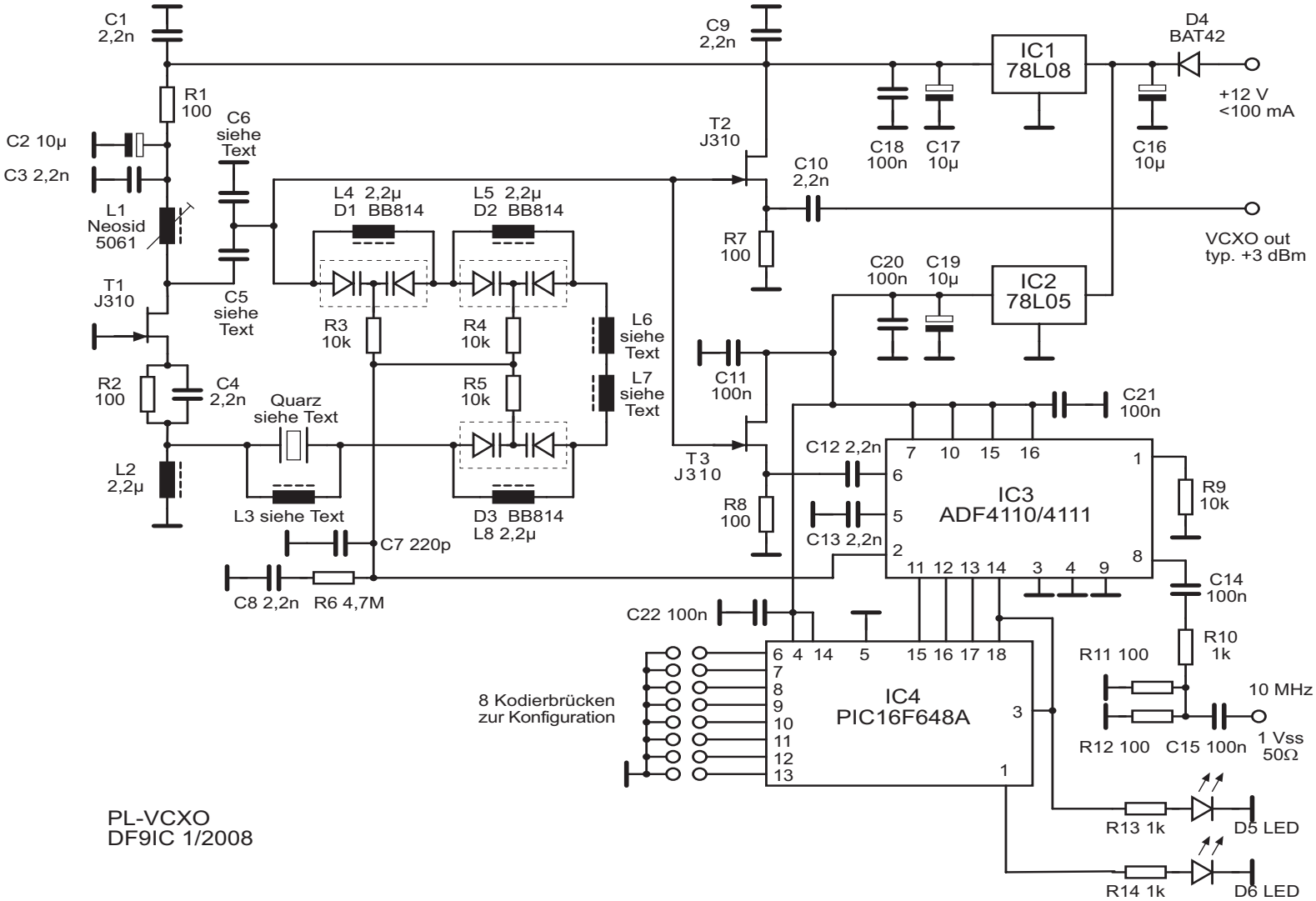

Construction of PL-VCXO

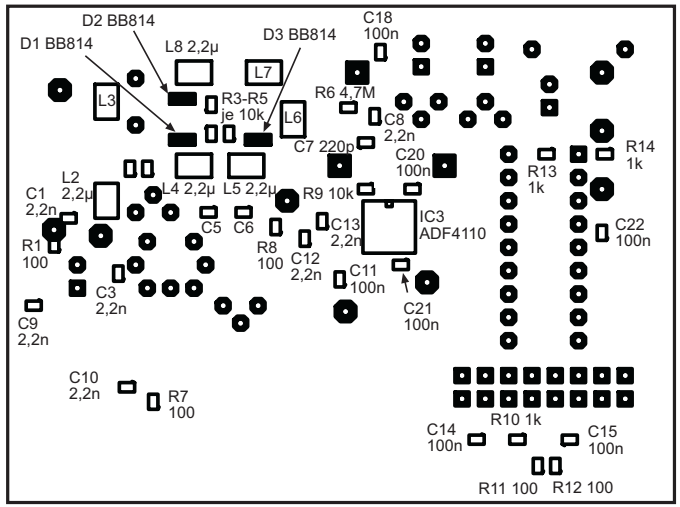

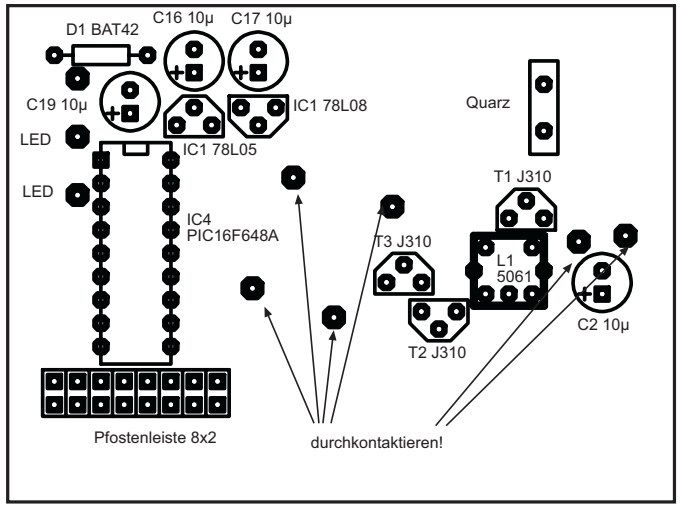

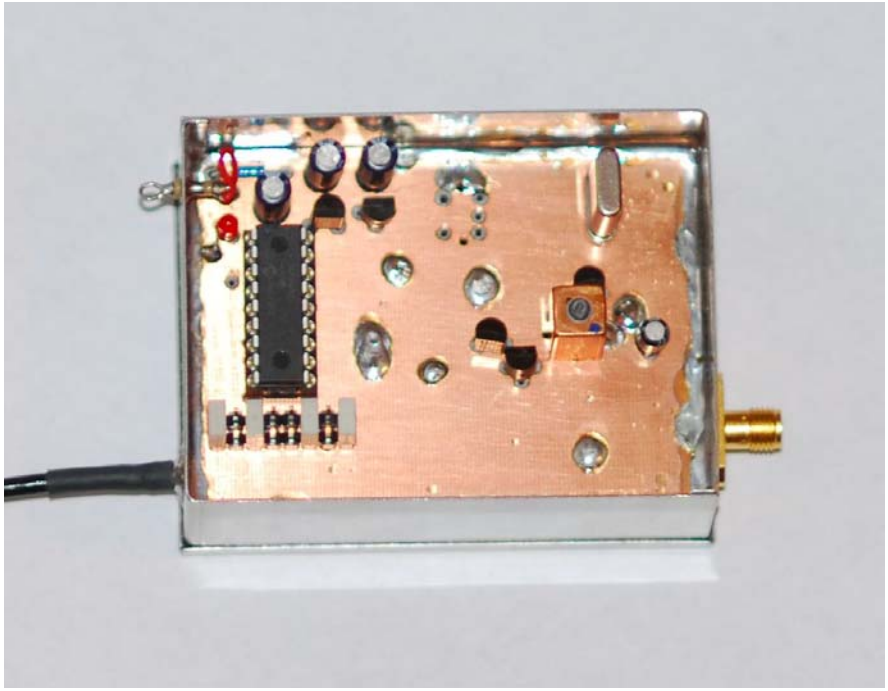

Spectrum (harmonics)

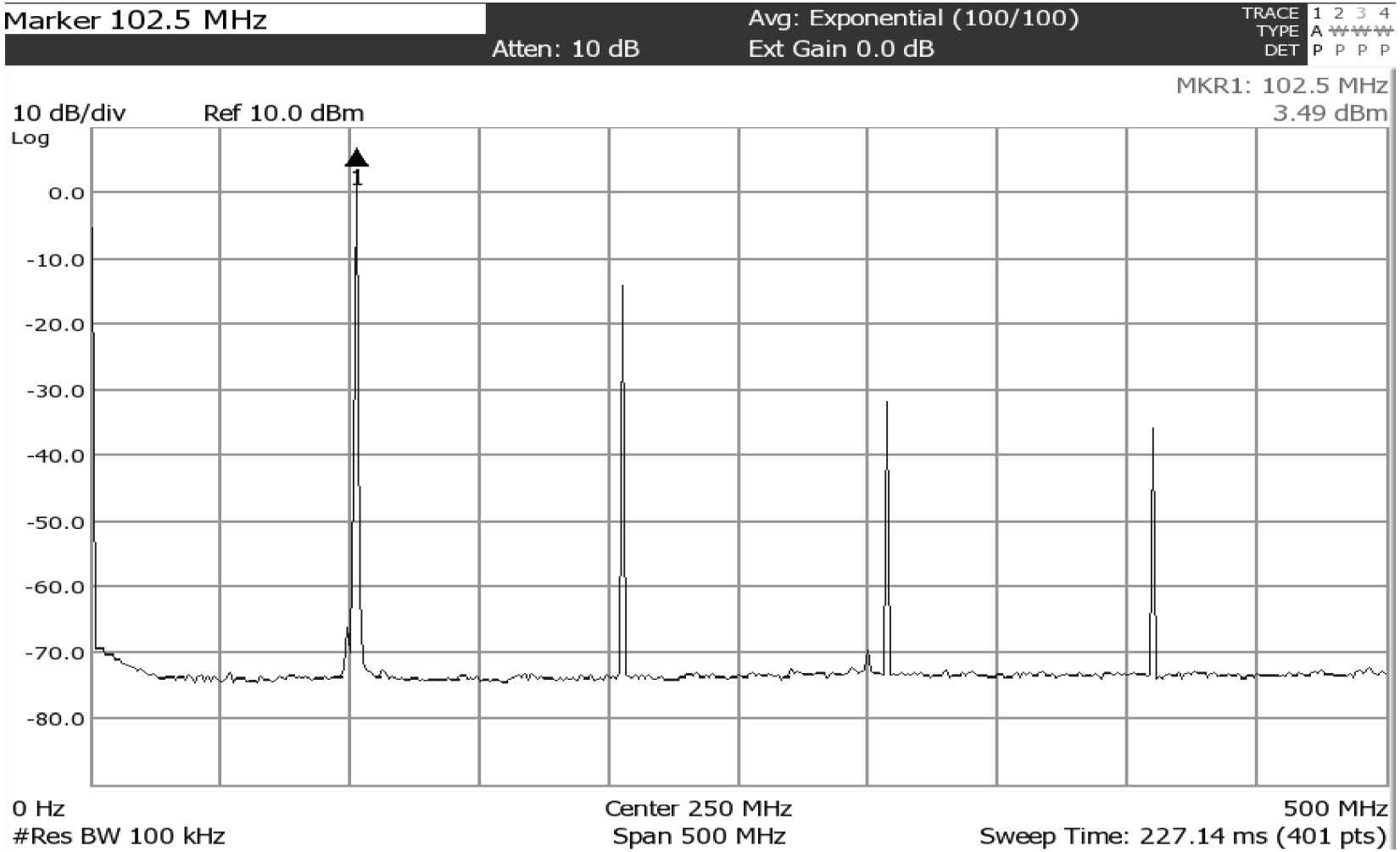

Spectrum (Spurii +/-12.5 MHz)

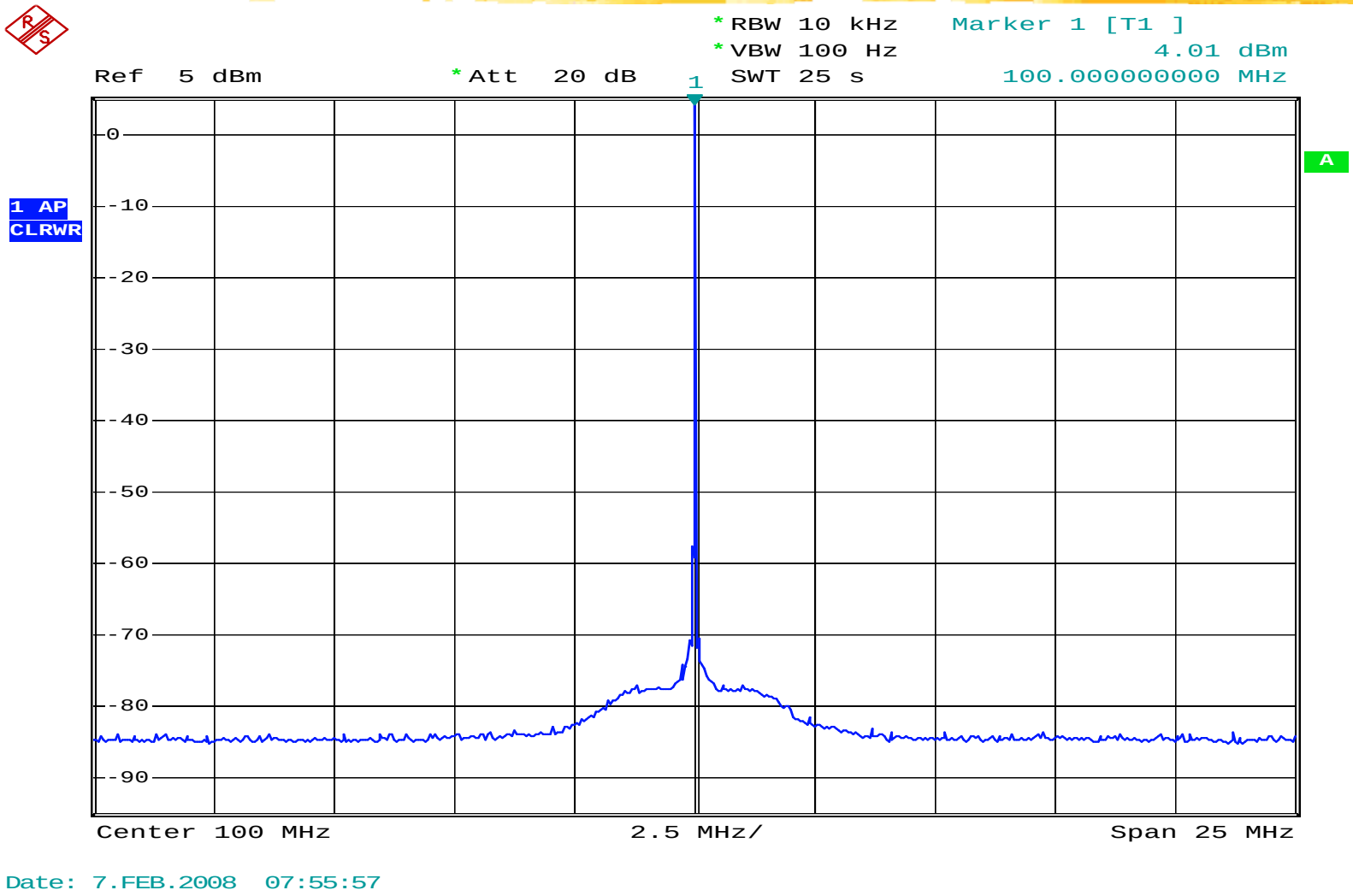

Spectrum (Spurii +/-5 kHz)

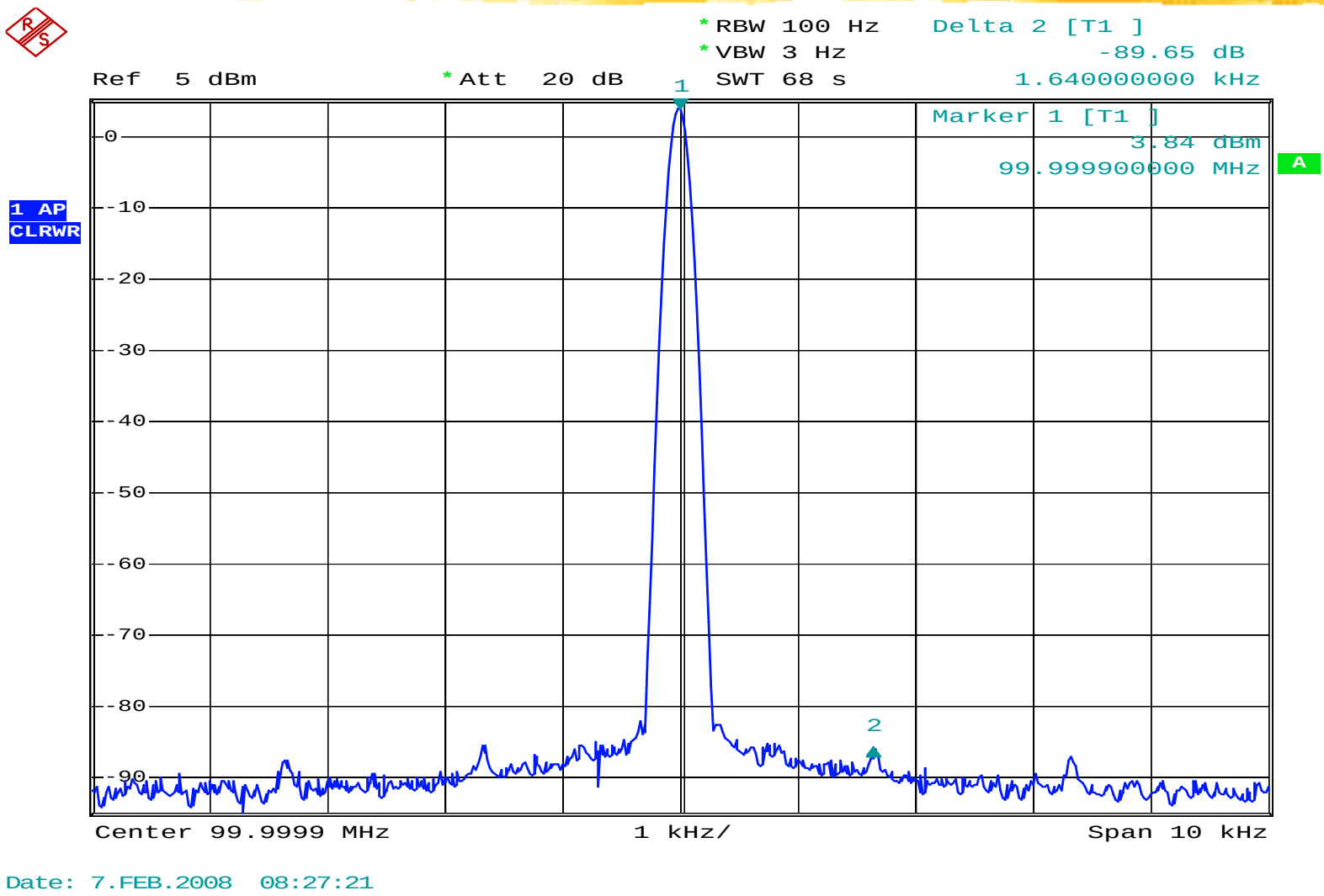

Transient behaviour

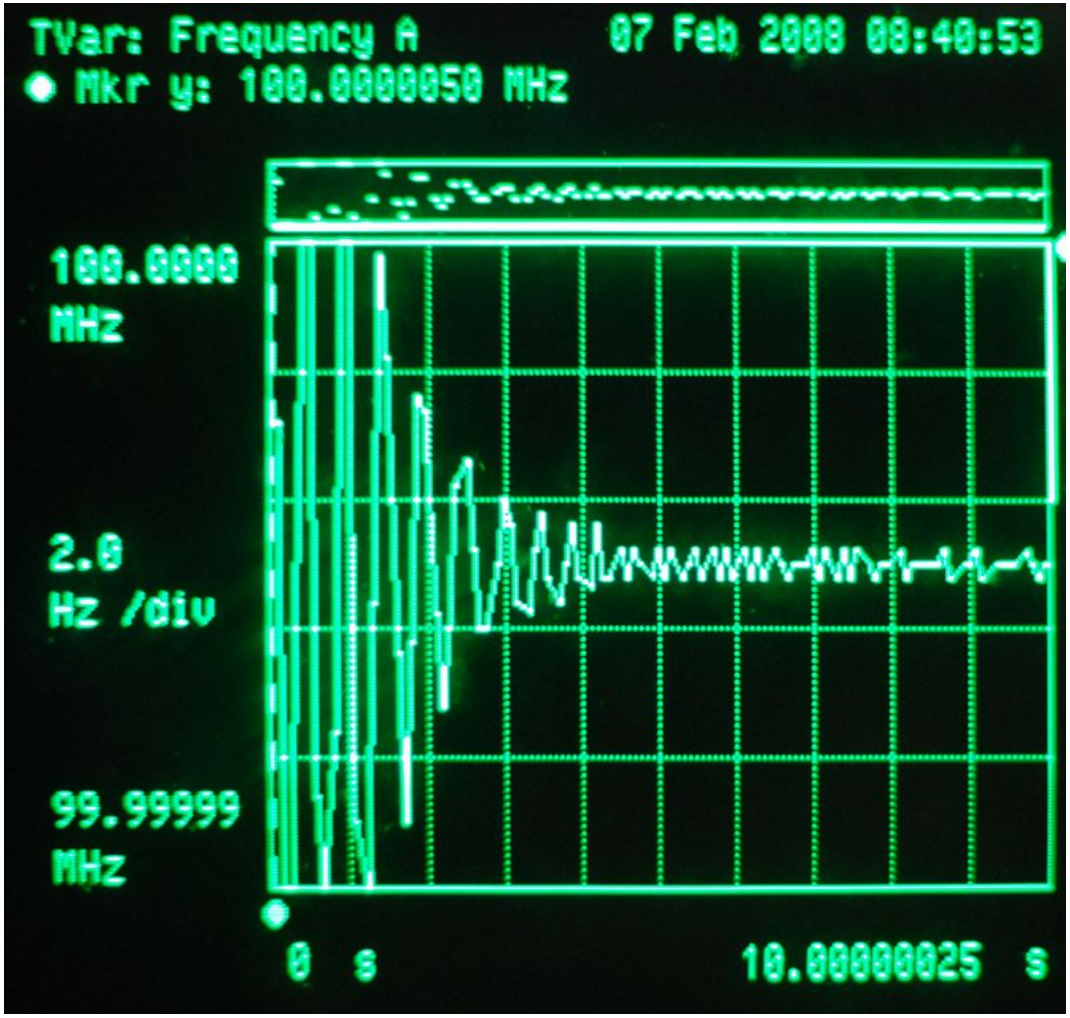

Measured with HP5371A

DUT locked to the HP5371A internal OCXO

Frequency:	100 MHz
Sample time:	100 ms
Resolution:	ca. 3 E-9

# of measurements: 100

PL-VCXO frequency stable after a few seconds

Frequency jitter

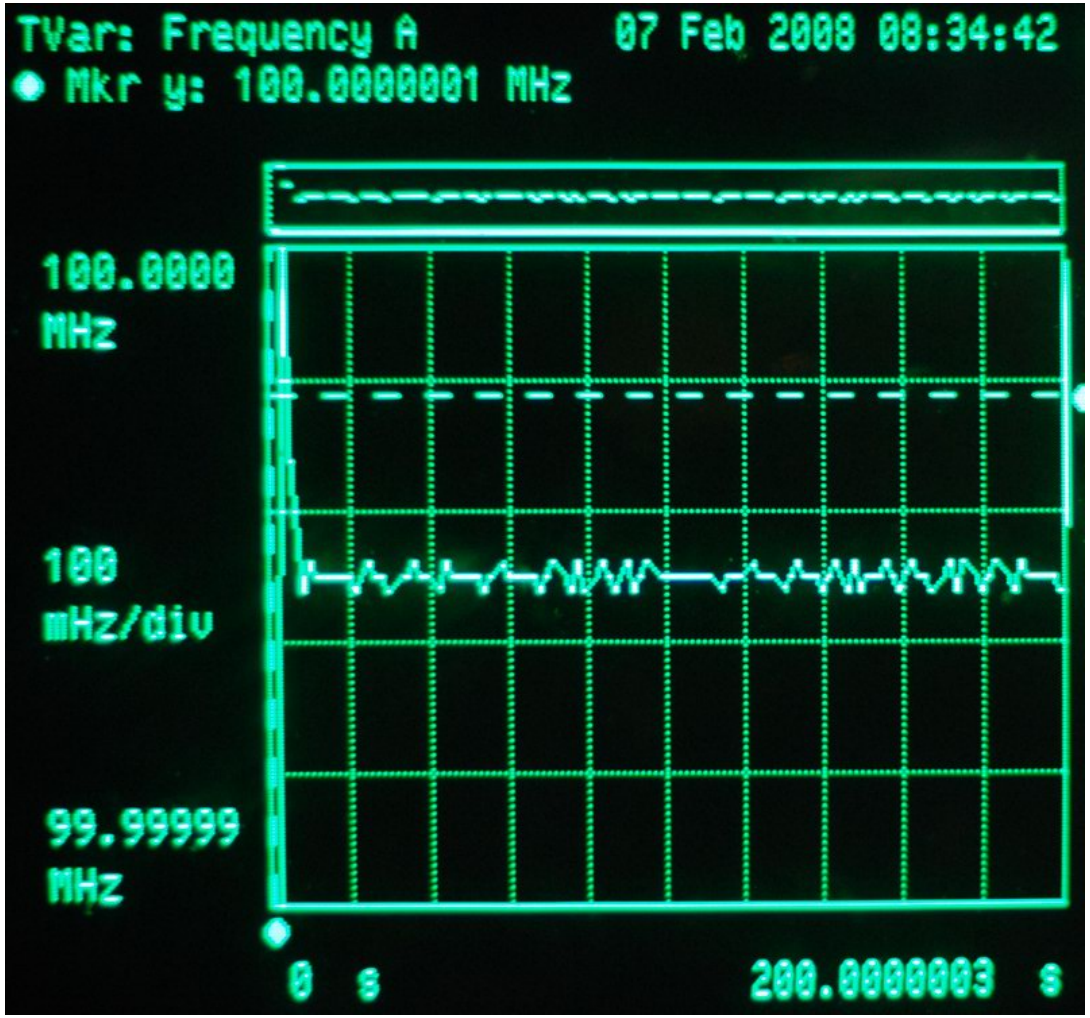

Measured with HP5371A

DUT locked to the HP5371A internal OCXO

Frequency:	100 MHz
Sample time:	2 s
Resolution:	ca. 1.5 E-10

# of measurements: 100

All measurements are within +-1 digit around the nominal value

Phase noise (simulation)

Simulation with ADISimPLL (Analog Devices)

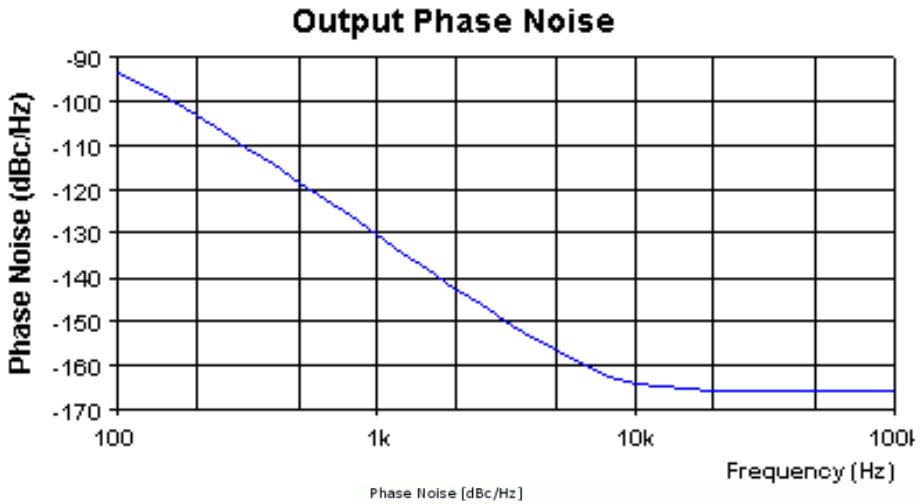

Measurement with R&S FSUP here in Knottebo

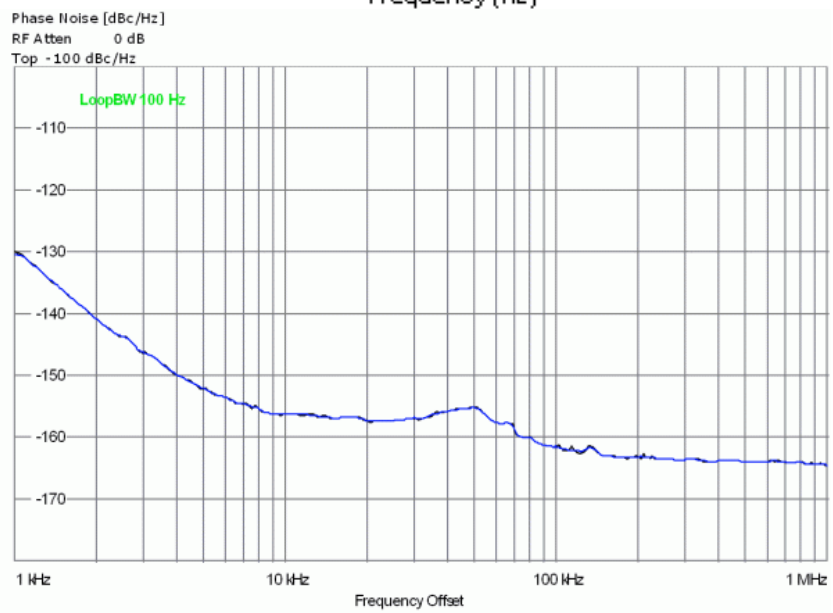

PLLO = PL-VCXO + multiplier

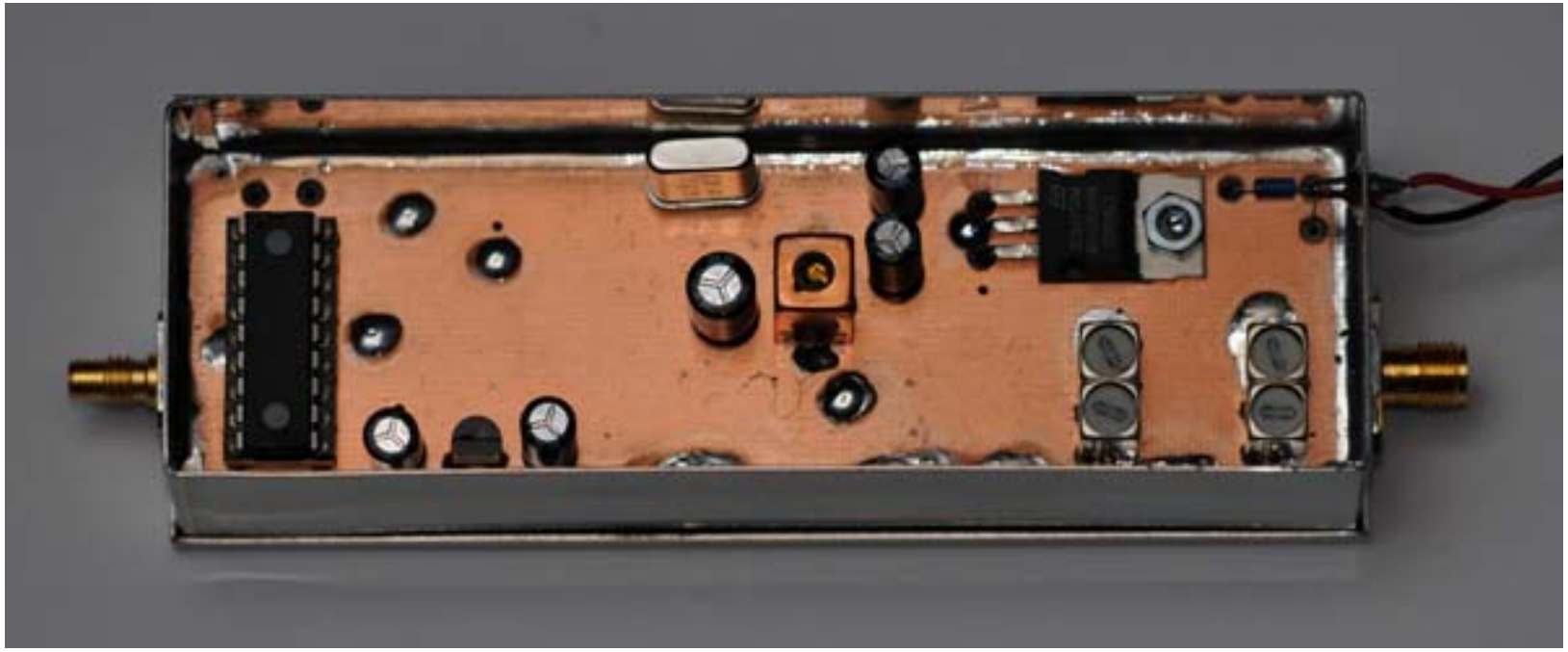

f_{out} = 900 ... 1300 MHz

PLLO design criteria

- VHF-XO + multiplier for best phase noise 1-100 kHz off the carrier, PLL disciplined XO
- Flexible multiplying and output frequencies
- Few standardized special components

- Passive symmetrical doubler as 1st multiplier
- GALi MMICs as active components
- Helix filter for output frequency

Frequency multipliers

- 1st multiplier stage: high level Schottky diode doubler

X2 Frequency Multiplier

AMK-2-13+

50Ω Output 20 to 1000 MHz

CASE STYLE: CD542
PRICE: $5.95 ea. QTY (10-49)

+ RoHS compliant in accordance with EU Directive (2002/95/EC)

The +Suffix has been added in order to identify RoHS Compliance. See our web site for RoHS Compliance methodologies and qualifications.

Maximum Ratings

Operating Temperature	-40°C to 85°C
Storage Temperature	-55°C to 100°C
RF Input Power	23 dBm

Pin Connections

INPUT	3
OUTPUT	6
GROUND	1,4,5
NOT USED	2

Outline Drawing

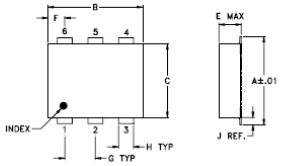

Features

- broadband
- low conversion loss, 11.4 dB typ.
- high rejection F1 and F3, -45 dBc typ.
- low cost
- aqueous washable

Applications

- synthesizers
- local oscillators
- satellite up and down converters

Electrical Specifications

MULTIPLICATION FACTOR	FREQUENCY (MHz)		INPUT POWER (dBm)		CONVERSION LOSS (dB)		*HARMONIC OUTPUT (dBc)					
	F1	F2					F1		F3		F4	
	Input	Output	Min.	Max.	Typ.	Max.	Typ.	Min.	Typ.	Min.	Typ.	Min.
2	10-500	20-1000	4	10	11.4	14.5	45	20	45	25	22	12

* Harmonics of input frequency below the power level of F2

- 2nd multiplier stage: comb generator and helix filter

Frequency multiplier circuit

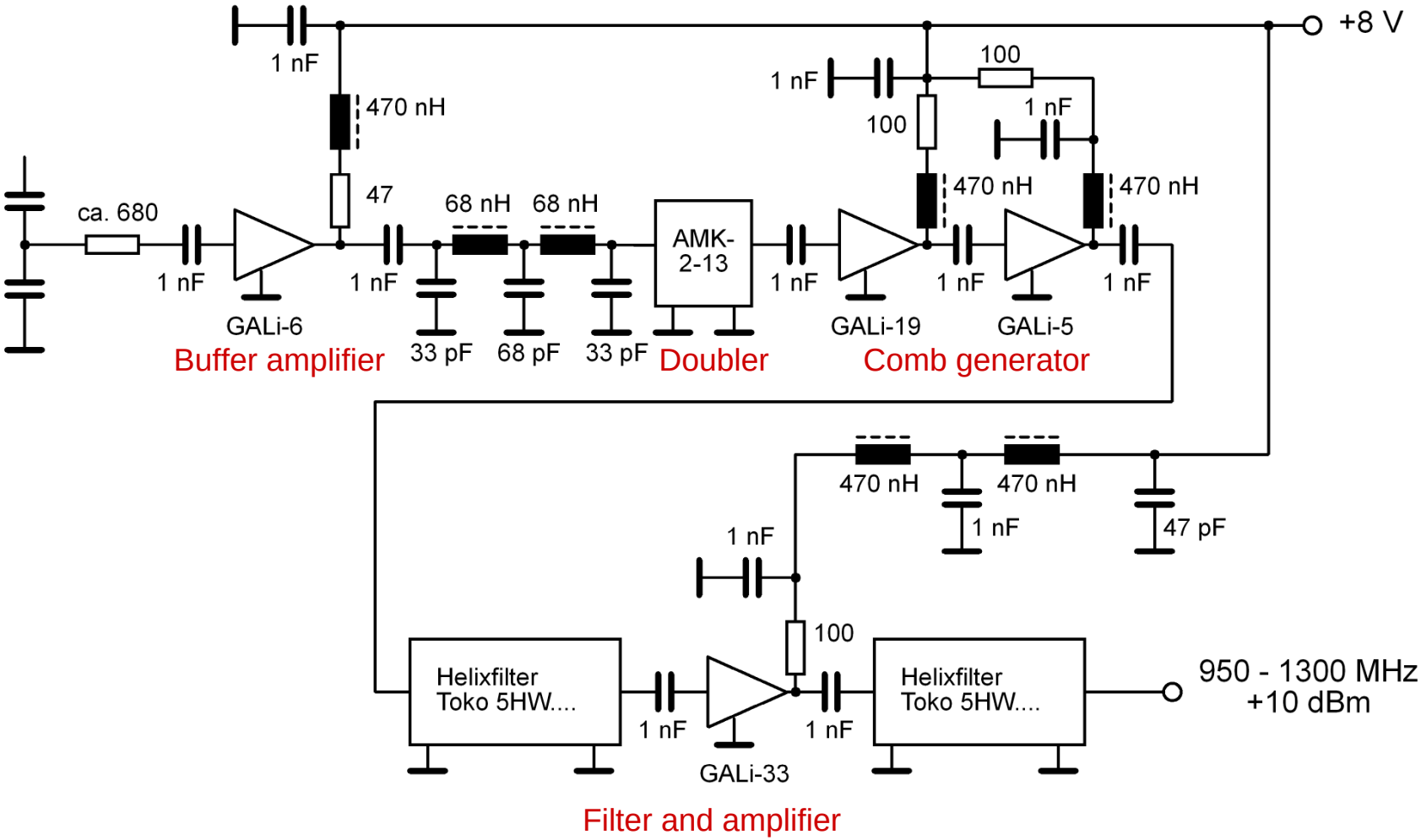

Layout PLLO

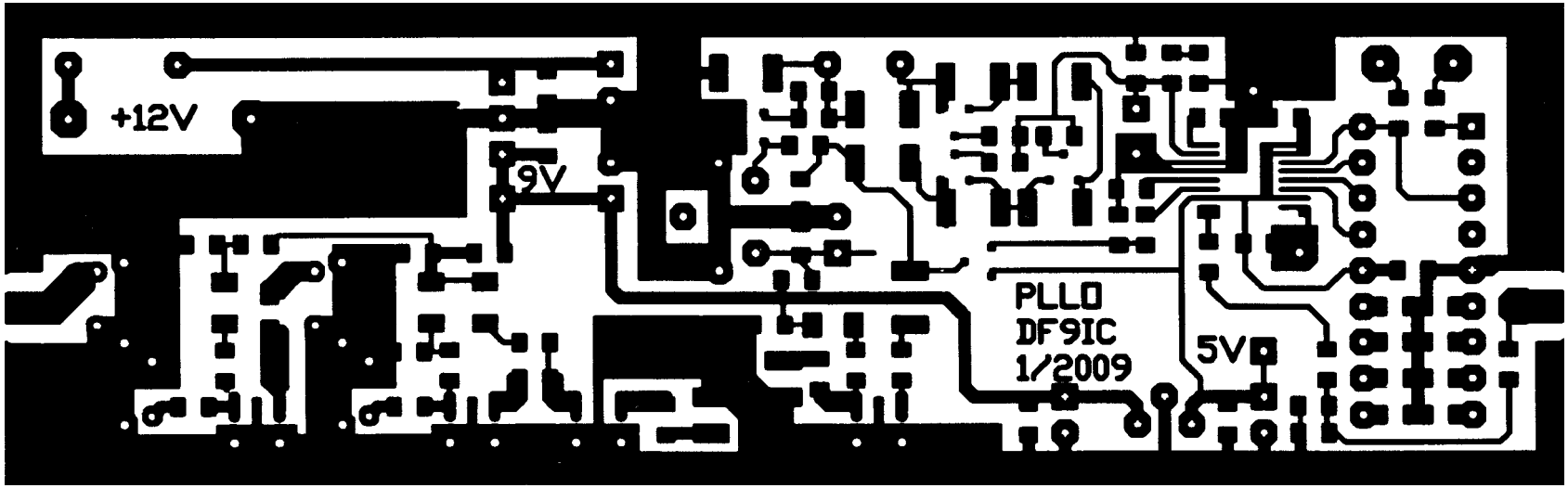

FR4 1,5 mm 37 x 111

Spectra between stages

- at output of AMK-2:
  271,25 MHz -4 dBm
- at output of GALi-5:
  1085 MHz +2,5 dBm

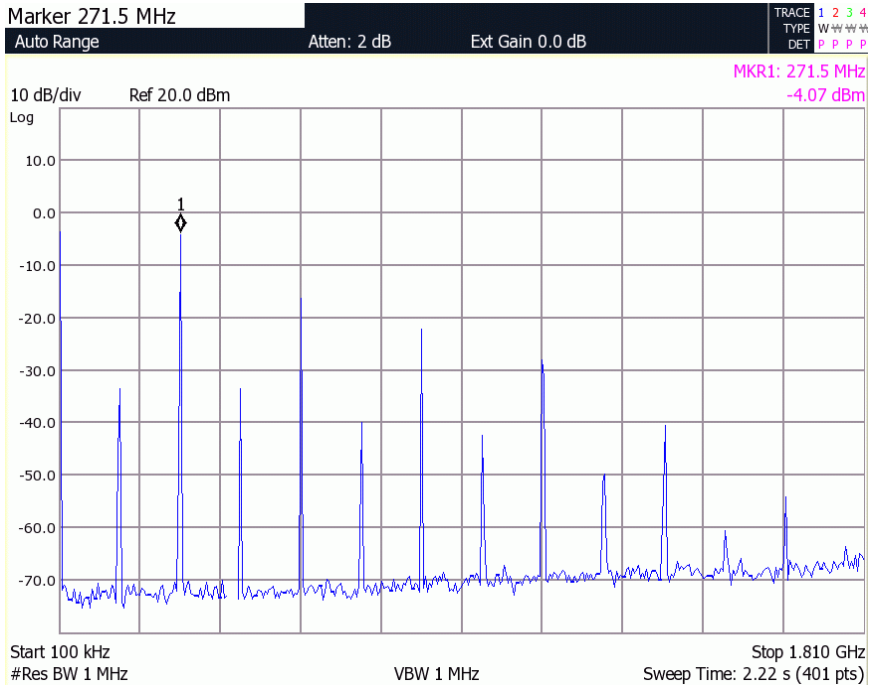

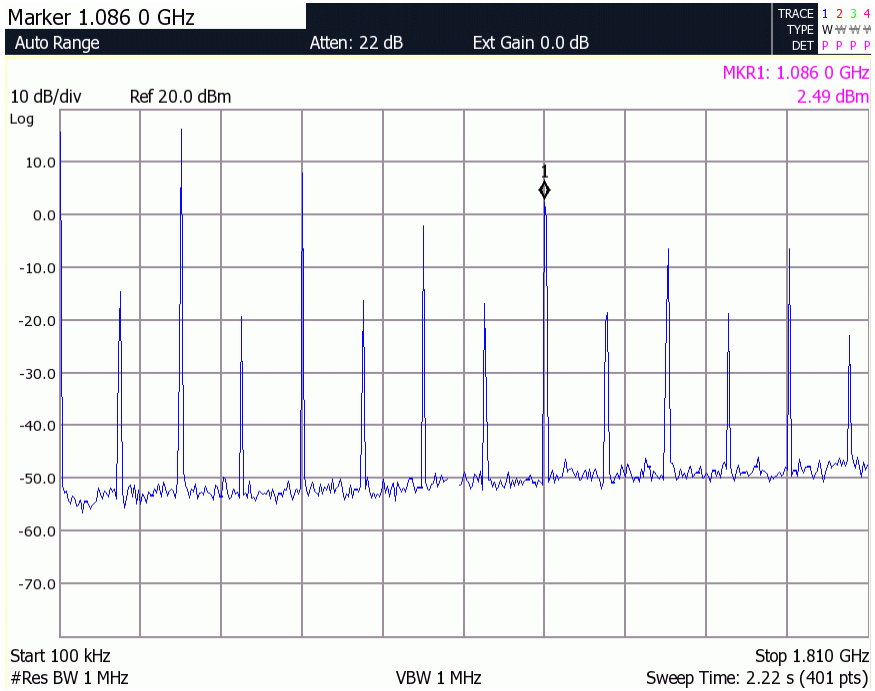

Output spectrum

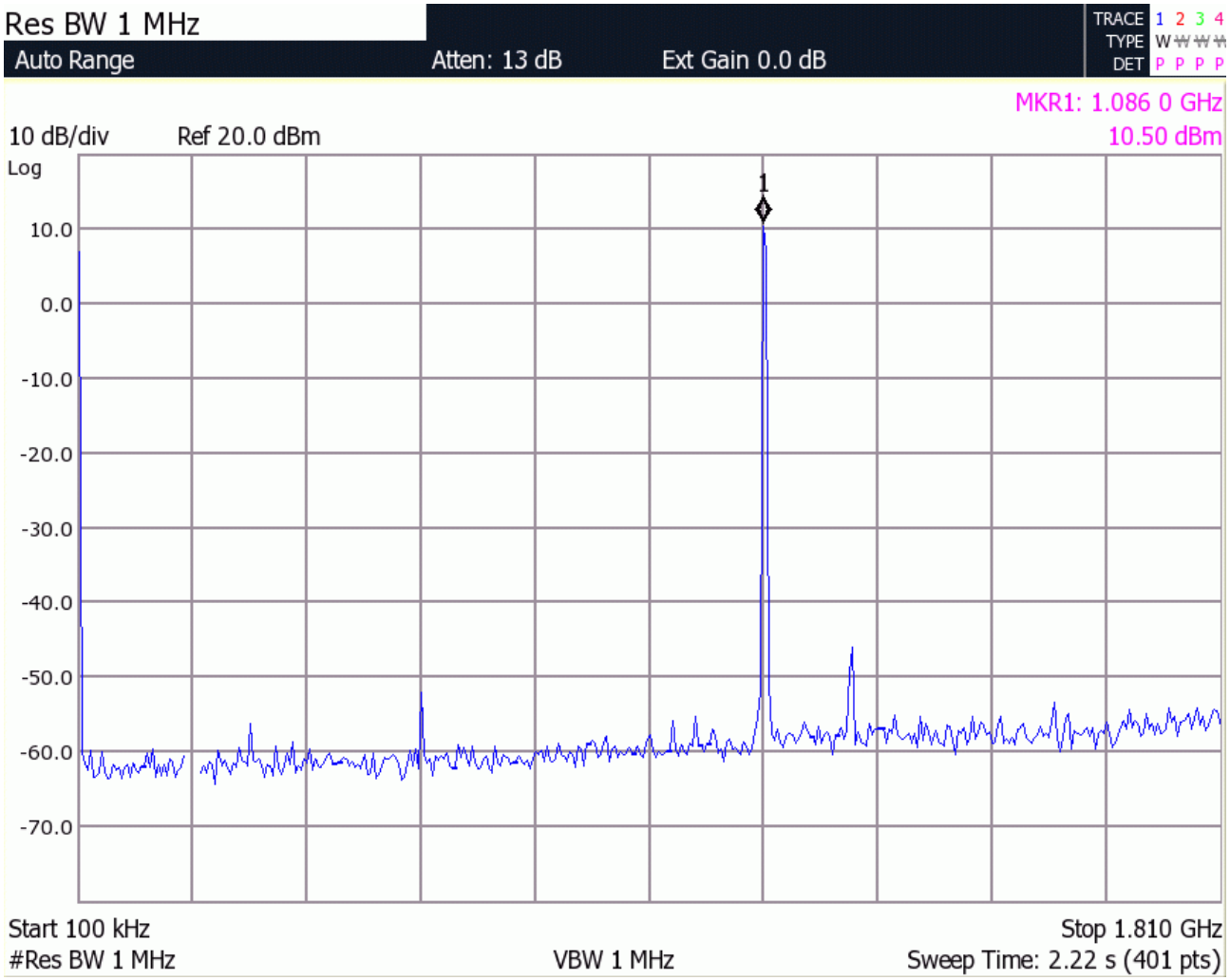

Output phase noise (PLL OFF)

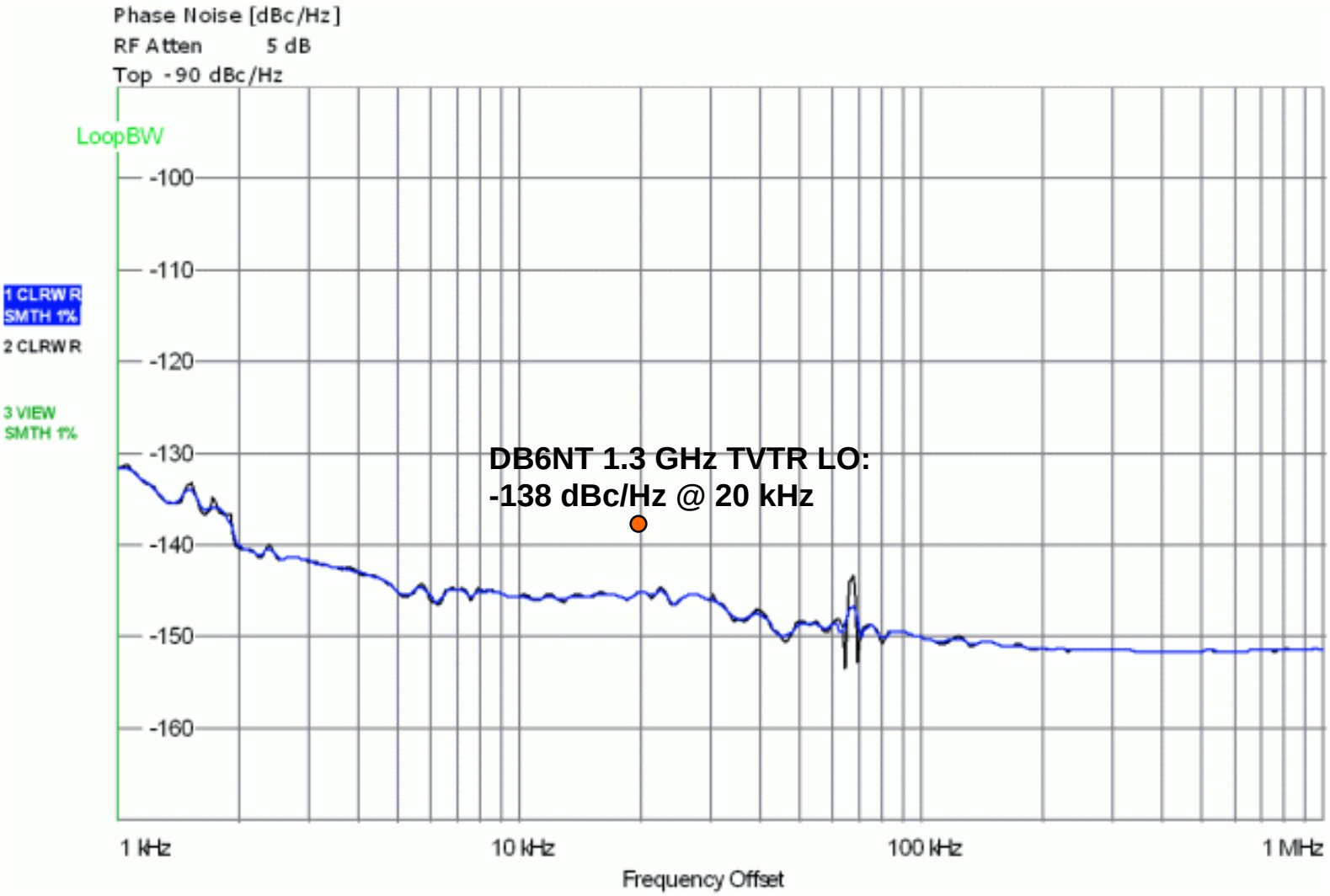

Result PLLO

- Universal LO chain for various microwave transverters
- PLL to an external frequency standard included
- 55 dB spurious attenuation
- Phase noise -150 dBc/Hz @ 100 kHz for 1 GHz output

Content

- Multiband transverter systems
- Filters and multiplexers
- PLL-disciplined oscillators
- Transverters
- 2320 MHz transverter core
- 5760 MHz transverter core
- Further modules (planned)
- Conclusion

Modular TVTR approach

- (23 cm), 13 cm, 9 cm, 6 cm
- Separate modules:
  - 1 PLLO + 1 TVTR core (frequency translator) for each band
  - Common IF interface for up to 4 transverters and 2 RXs
  - Common control and telemetry board
- Easier development and more flexible than single box transverters
- Disadvanteges: size, additional connections

Modular TVTR approach

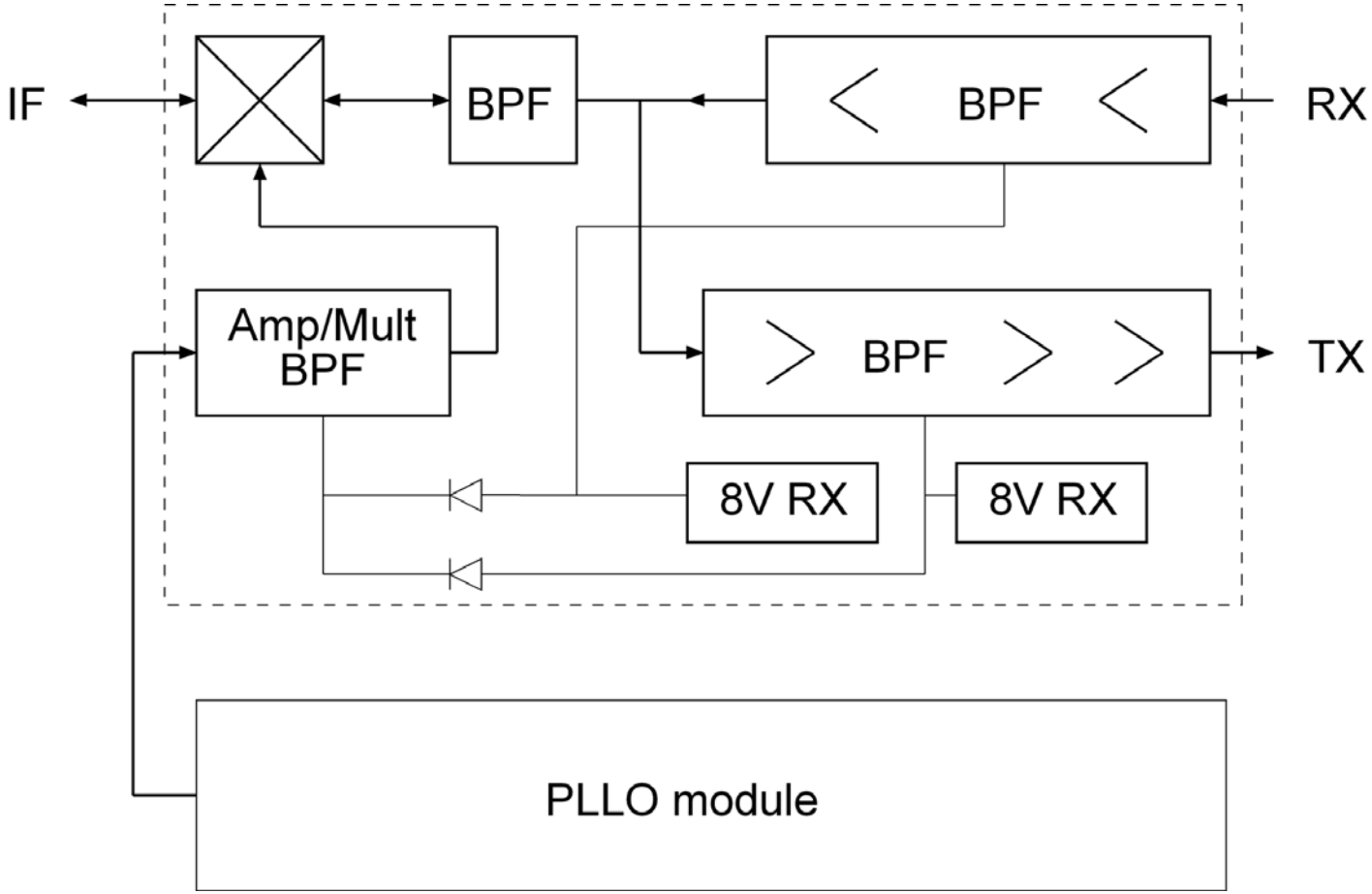

Multipliers to the final LO frequency

- 23 cm: 1150 MHz x 1 with 146 MHz IF
  1246 MHz x 1 with 50 MHz IF
- 13 cm: 1087 MHz x 2 with 146 MHz IF
- 9 cm: 1084.666 MHz x 3 with 146 MHz IF
- 6 cm: 934.666 MHz x 3 x 2 with 146 MHz IF

- Additional multiplier(s) part of the TVTR core module – needs moderate quality bandpass filter after 1st multiplier (Microstrip on FR4)

FR4 microstrip bandpass filter

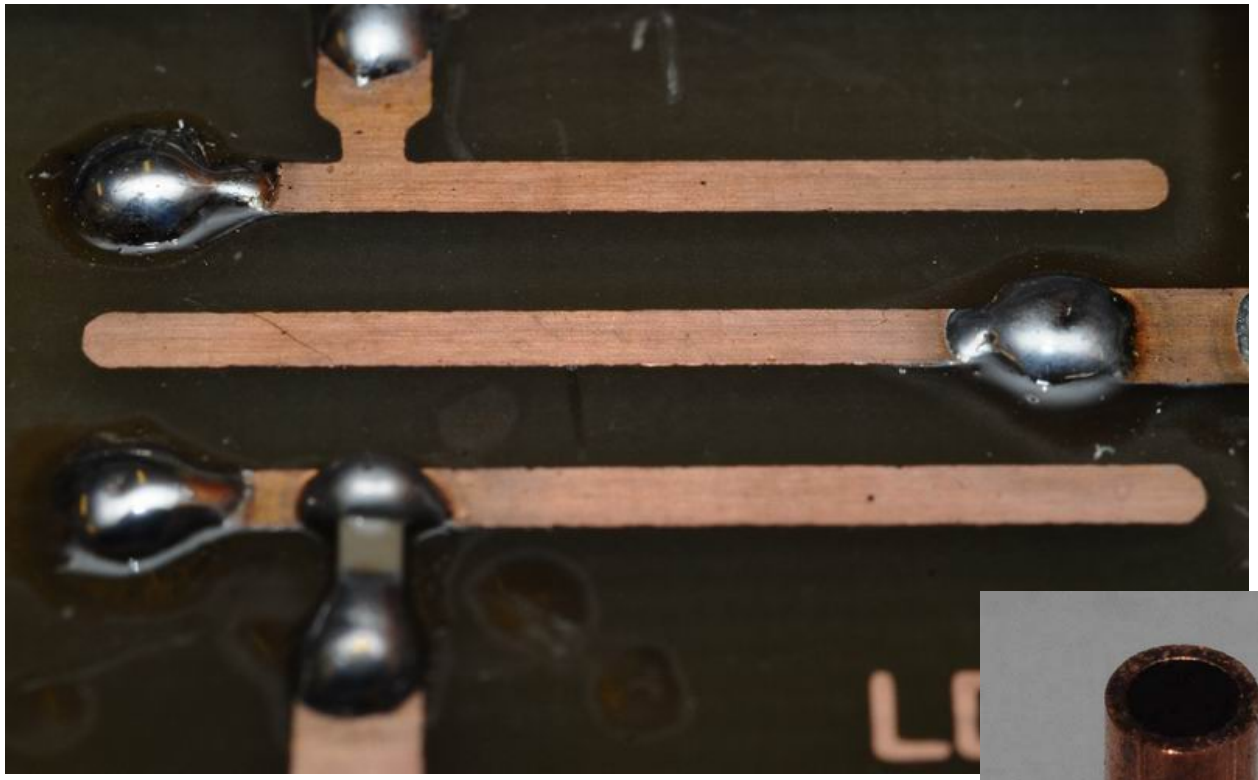

3 side coupled
$\lambda/4$ resonators

Precise contacts
to the GND plane
by rivets

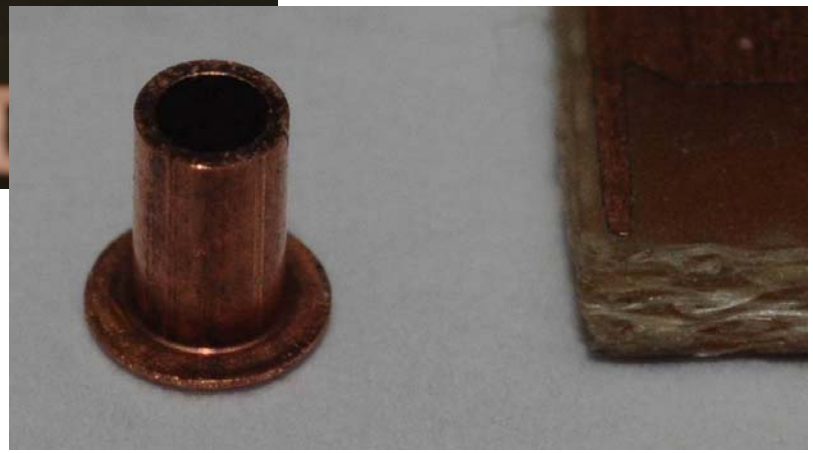

Bandpaß 2200 MHz FR4

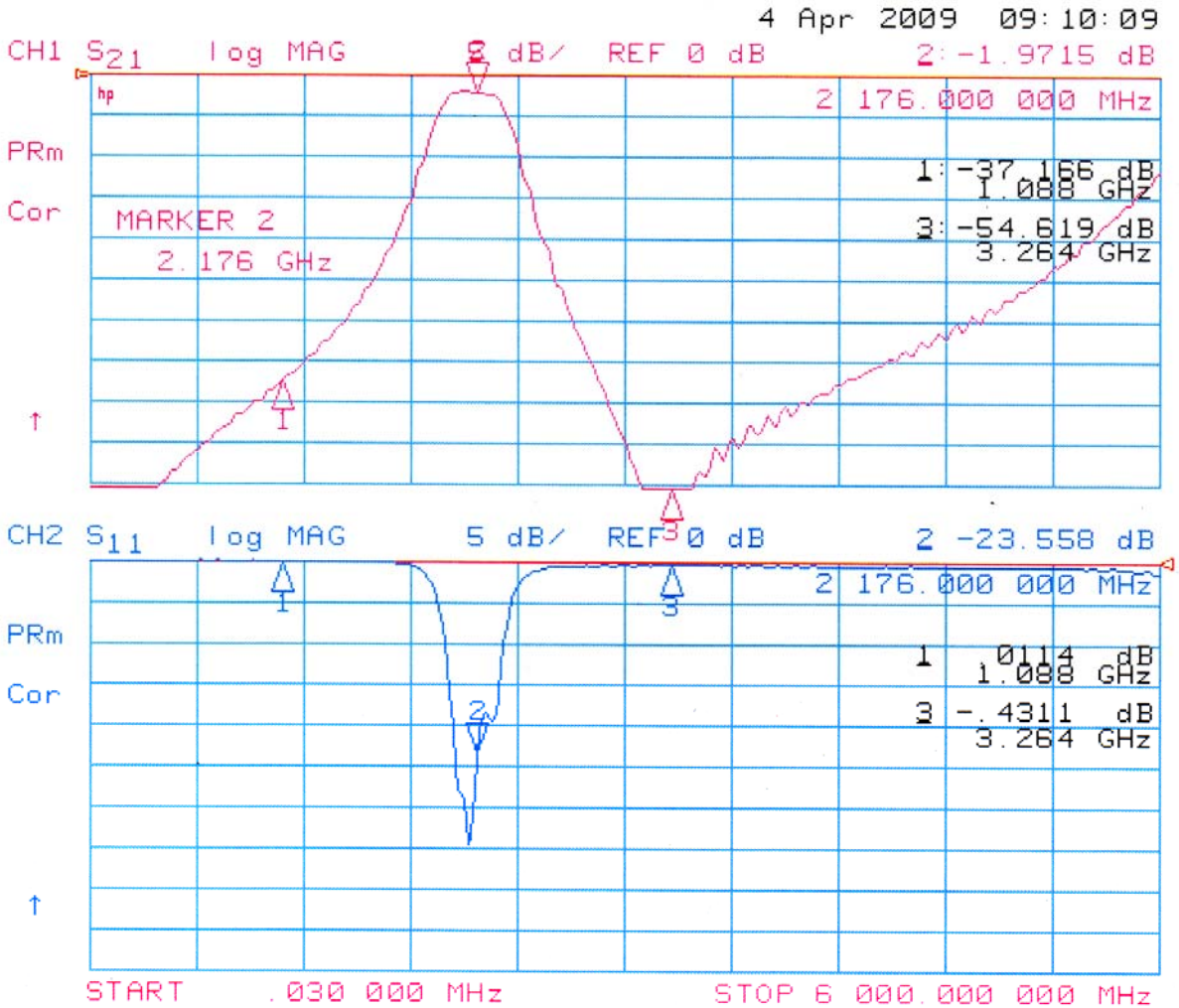

Example:

Bandpass for 13 cm LO frequency

1088 MHz: -37 dB
2176 MHz: -2 dB
3264 MHz: -54 dB

Can be schaled also to 2800 MHz (LO/2 for 6 cm) and 3250 MHz (LO for 9 cm)

Image and LO rejection filters

- Needed both in RX and TX section
- 1296 + 2320 MHz: helix filters available
- 3400 + 5760 MHz: pipecap resonators

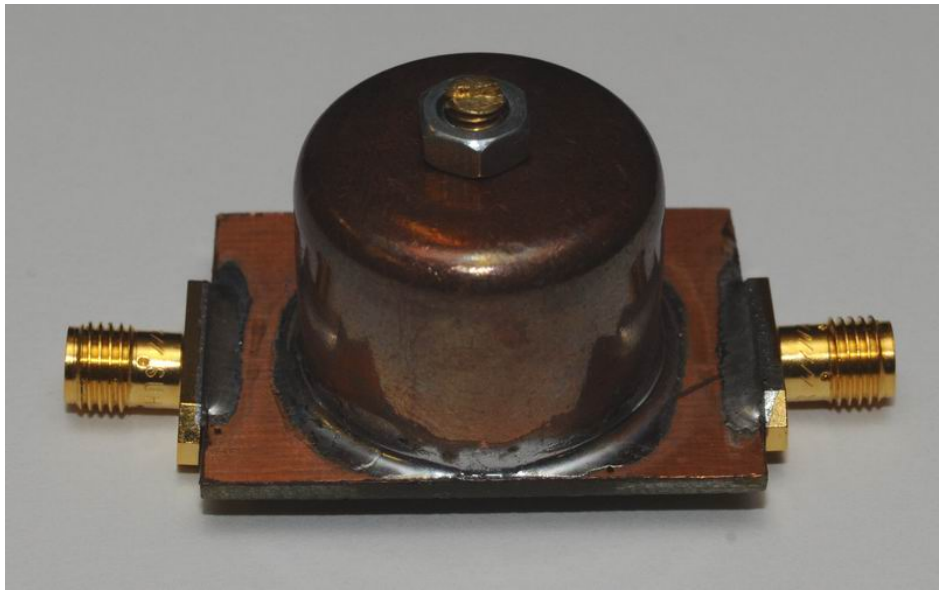

Pipecap filters for 3400 and 5760

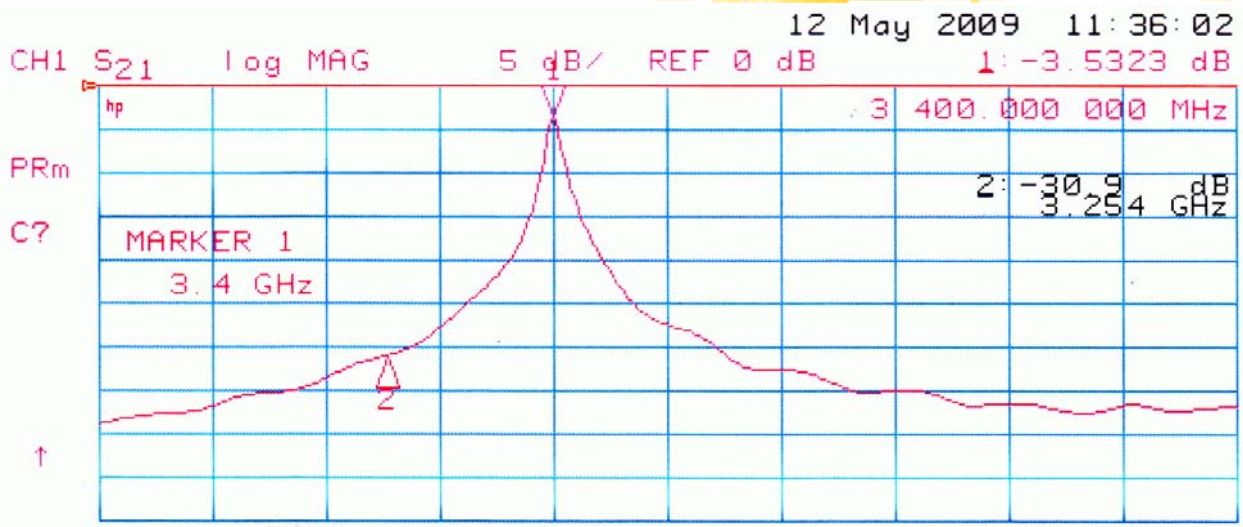

3400 MHz:
-3.5 dB

(3400-146) MHz:
-30 dB

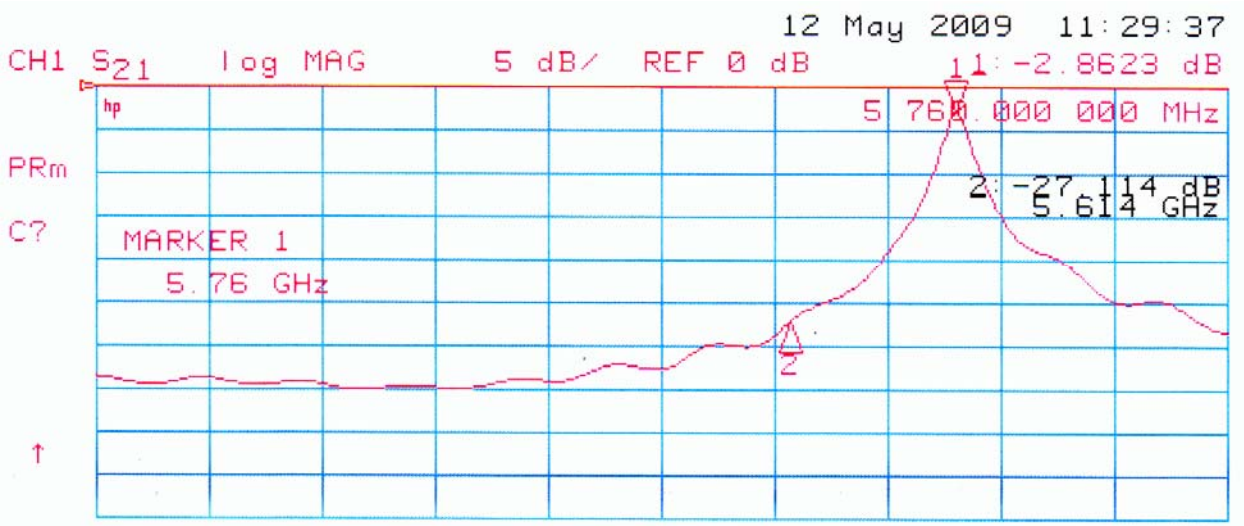

5760 MHz:
-2.8 dB

(5760-146) MHz:
-27 dB

Requirements for the TVTR core

- RX amp: low gain and sensitivity
- TX amp: low output power (+5...+15 dBm)
- LO:
  - (....)
- IF interface:
  - (....)

- => FR4 board and MMIC amplifiers

Active RF components for the TVTRs

- Use of a standardized set of MMICs
- GALi/GVA from MiniCiruits: good GND, good thermal design, easy to solder on PCB
  - GALi 19+ (similar to GALi 1): 10-12 dB gain for RX and small signal TX amp
  - GALi 33+ (similar to GALi 3): 15-20 dB gain for RX and small signal TX amp and multiplier
  - GALi 5+: multiplier, comb generator, amp
  - GVA 84+: medium power amp +20 dBm
- can be exchanged to vary gain and power

Active RF components for the TVTRs

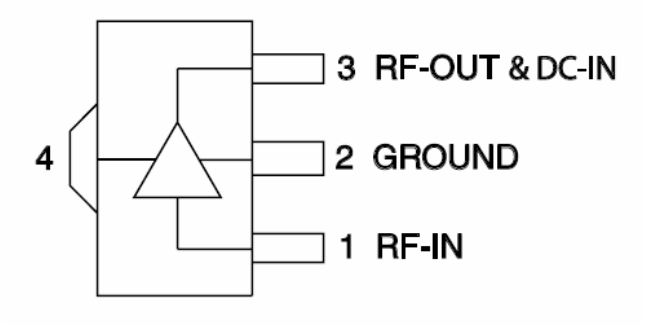

- 7...13 dBm mixers, sometimes available from surplus boards - e. g. WJ SME, MiniCircuits SIM

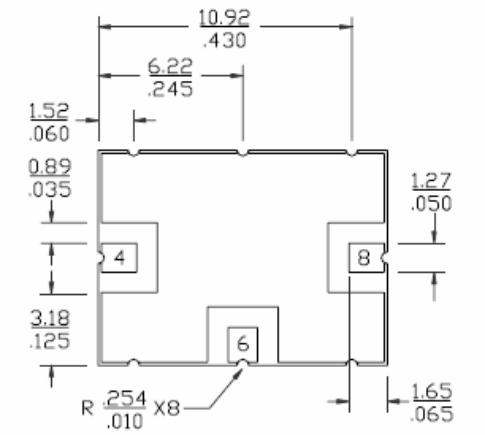

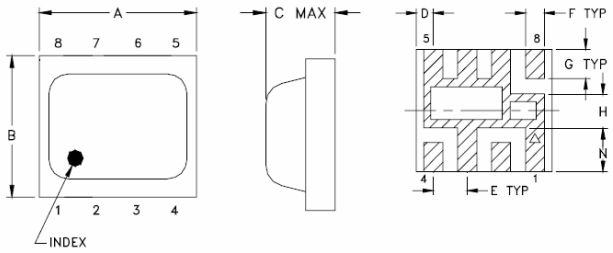

Content

- Multiband transverter systems
- Filters and multiplexers
- PLL-disciplined oscillators
- Transverters
- 2320 MHz transverter core
- 5760 MHz transverter core
- Further modules (planned)
- Conclusion

Transverter core for 2320 MHz

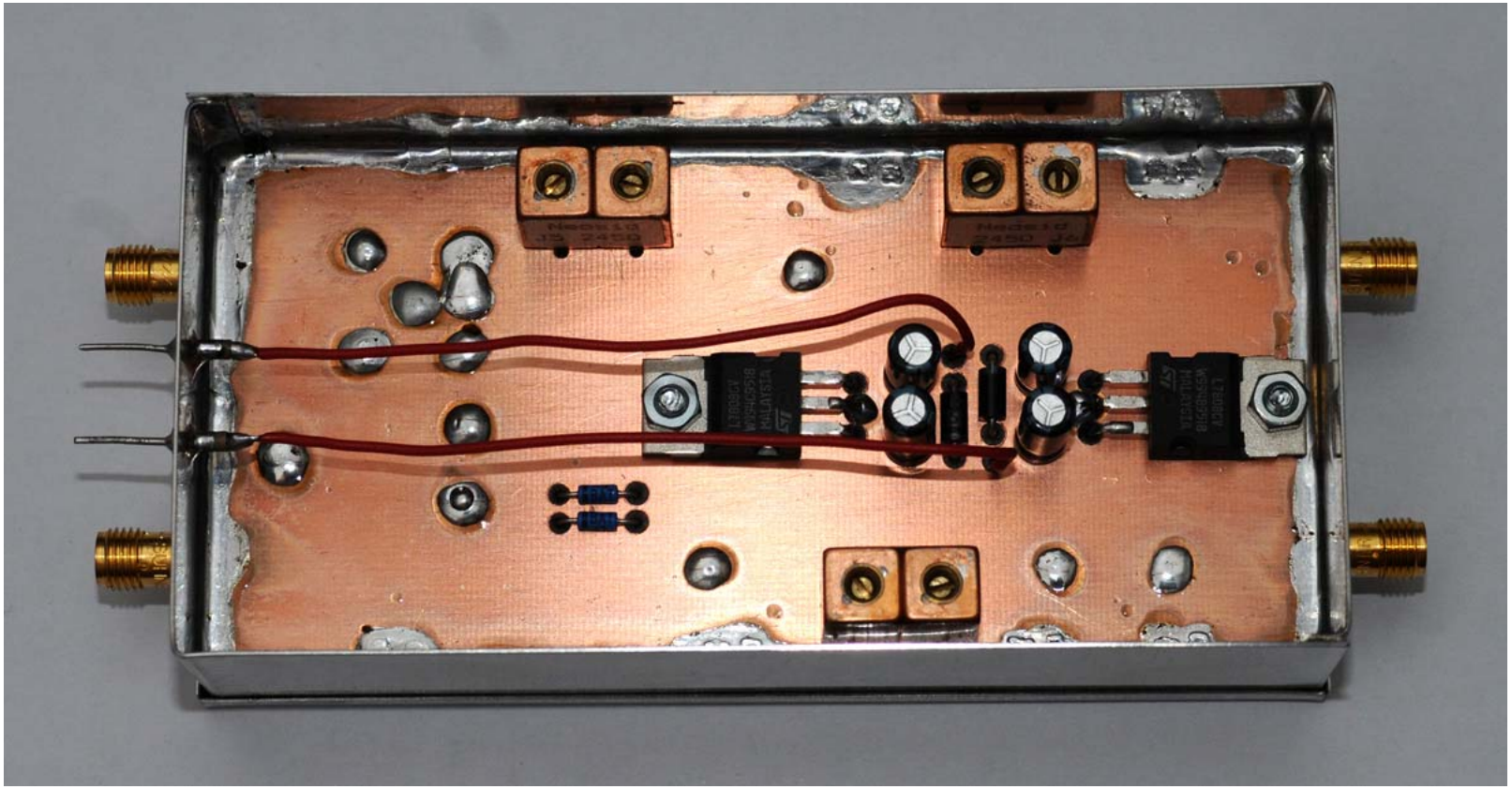

TVTR 2320: Block diagram

- RX: 2-stage amplifier, 2 helix filters
- TX: 2- or 3-stage amplifier, 2 helix filters
- LO: frequency doubler + bandpass, 10-13 dBm

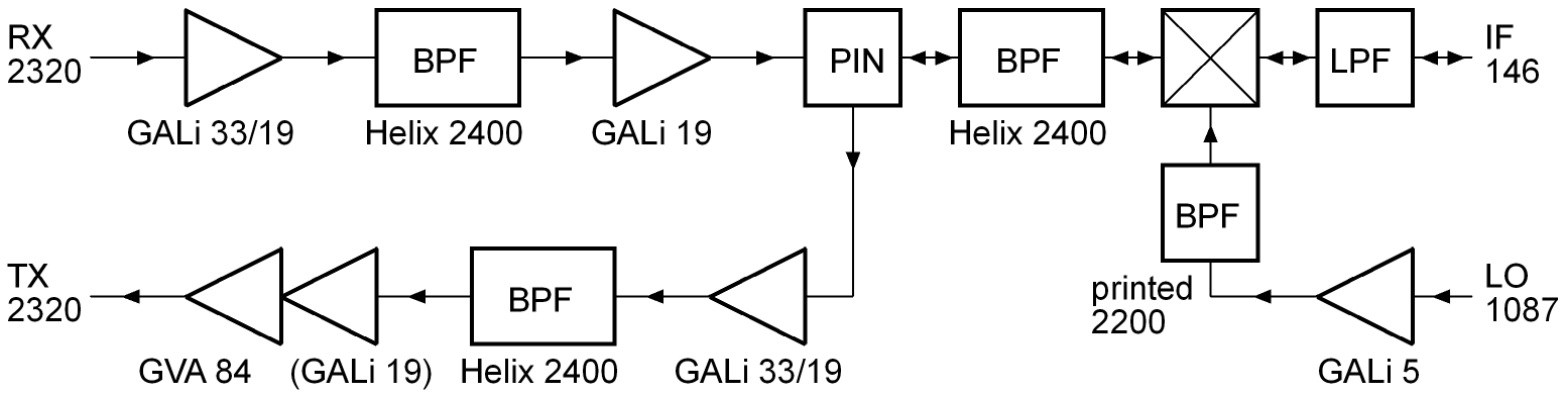

PCB layout 13 cm transverter

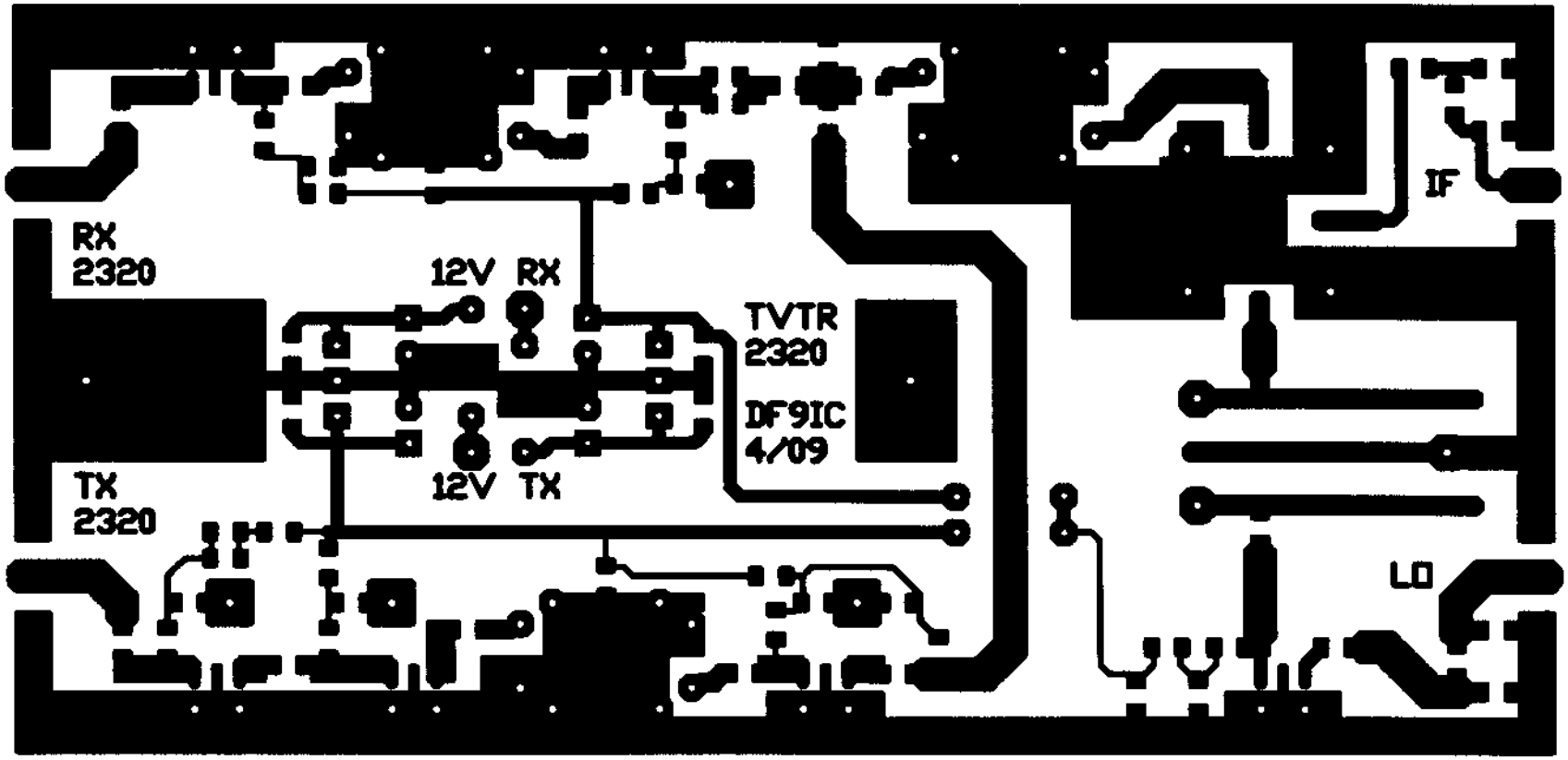

FR4 1,5 mm 55 x 111

Transverter core for 2320 MHz

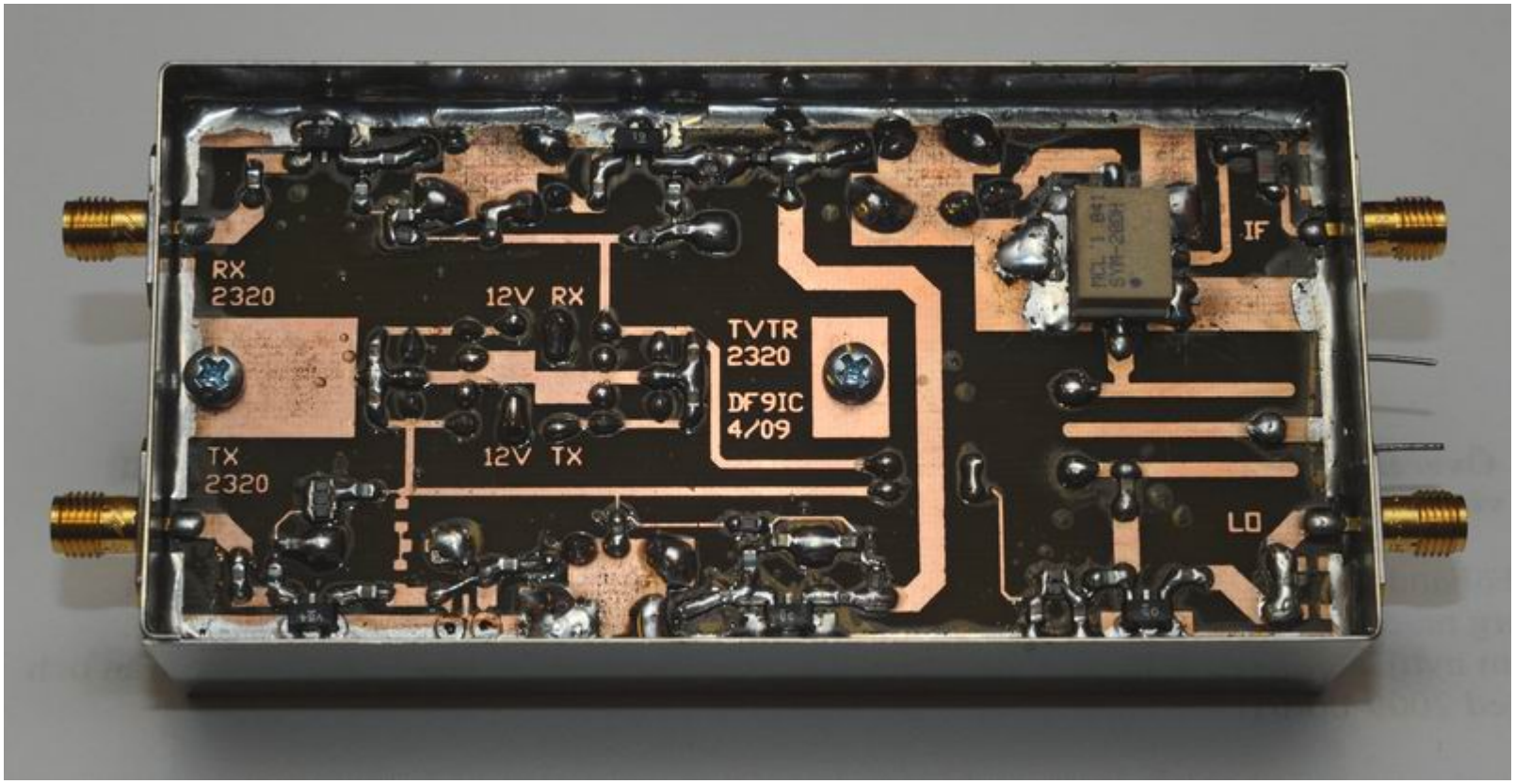

Spectrum at LO x2

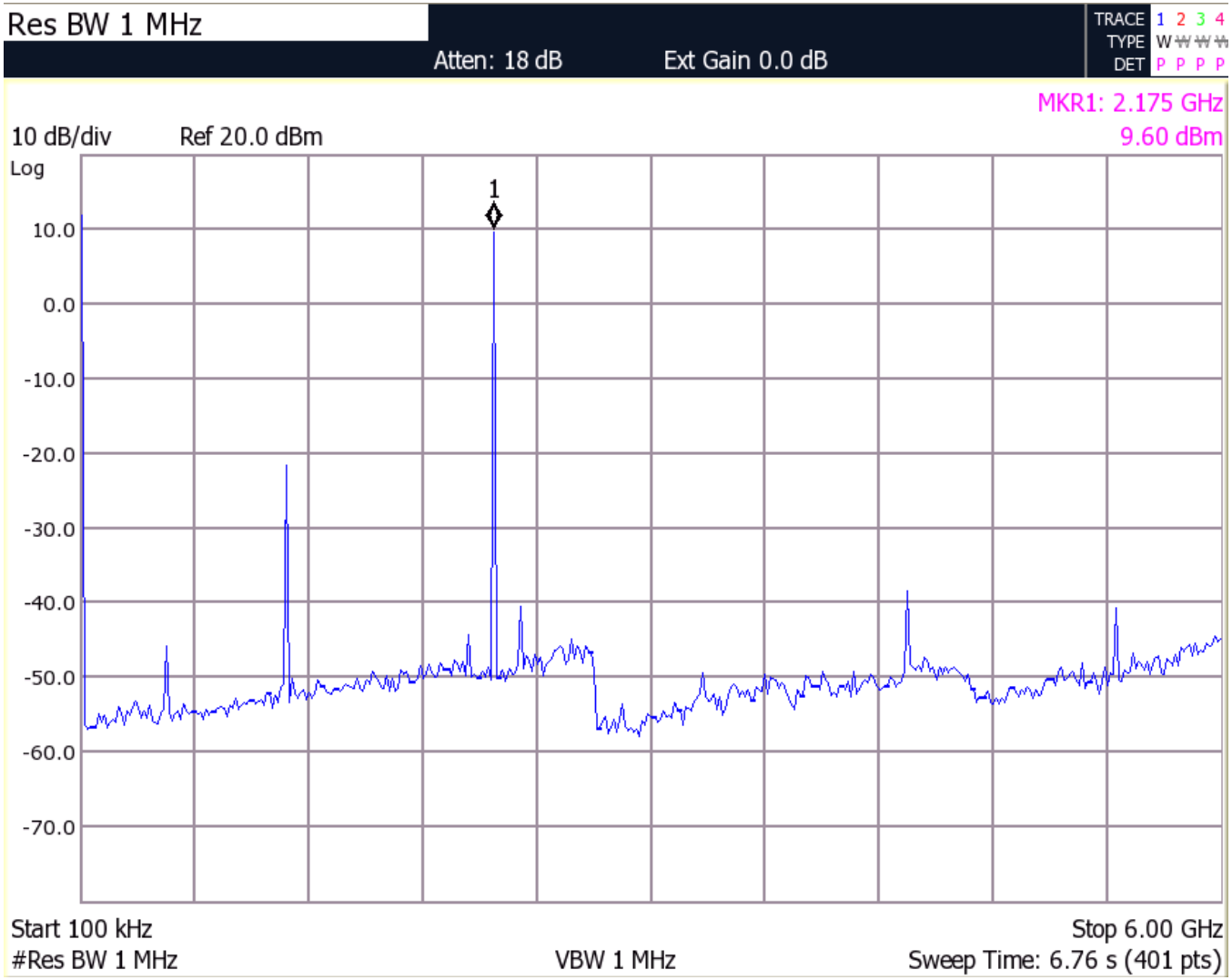

Spectrum at mixer output

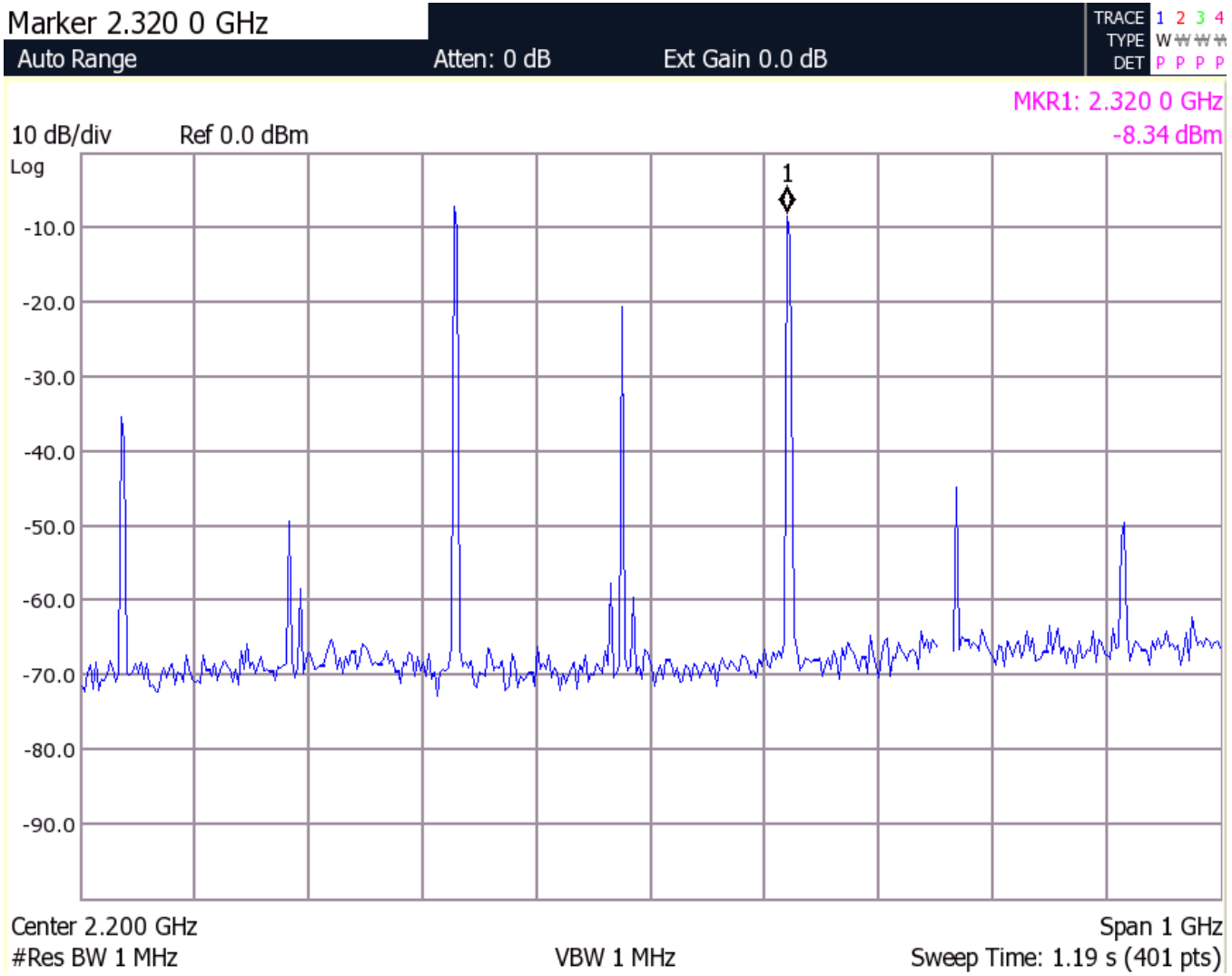

Spectrum at TVTR output

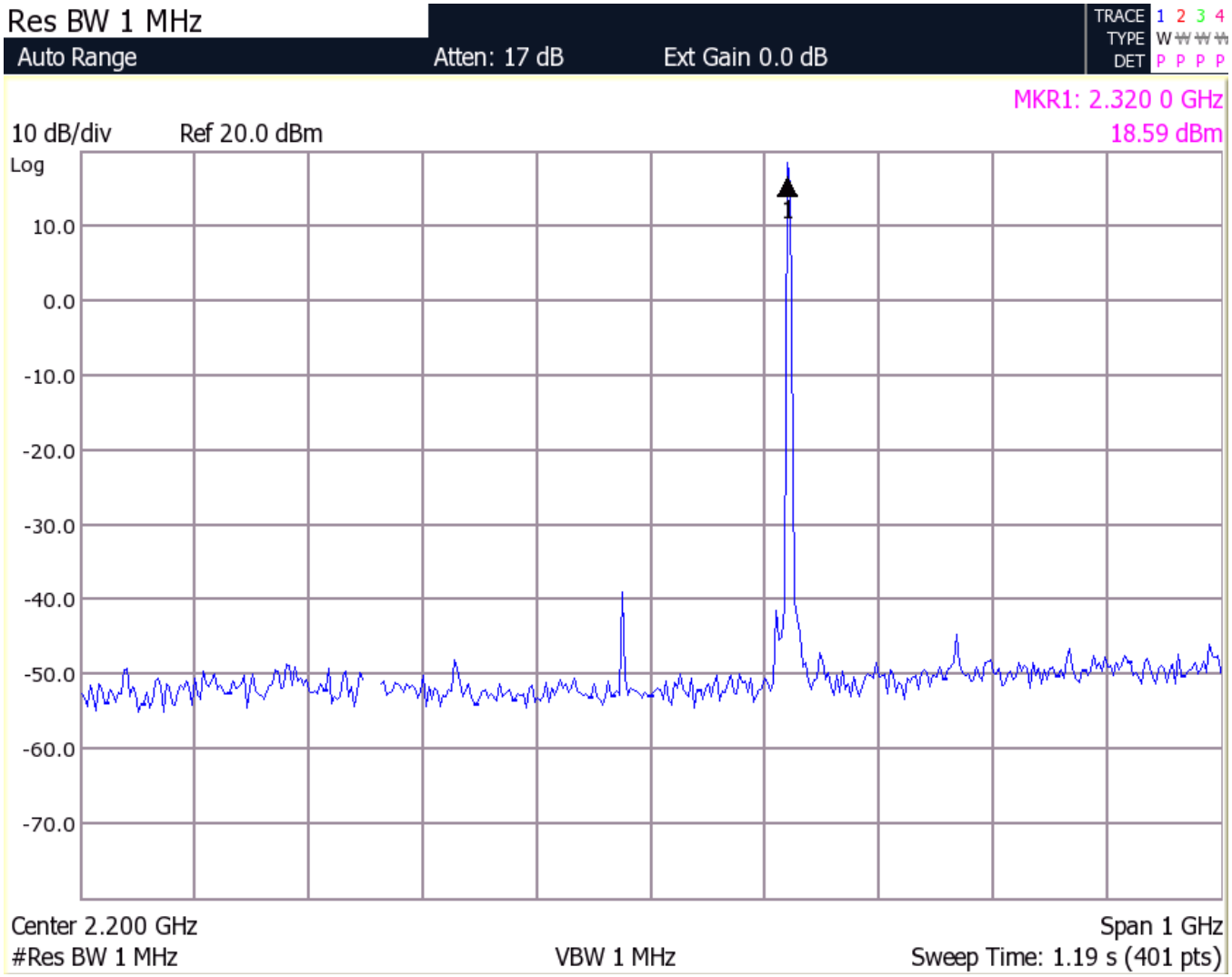

Results 13 cm transverter core

- Simple construction, FR4 board
- TX: up to 20 dBm at >55 dB spurious attenuation
- RX: 4 dB noise figure and 10 dB conversion gain (with indicated parts)

Content

- Multiband transverter systems
- Filters and multiplexers
- PLL-disciplined oscillators
- Transverters
- 2320 MHz transverter core
- 5760 MHz transverter core
- Further modules (planned)
- Conclusion

Transverter core for 5760 MHz

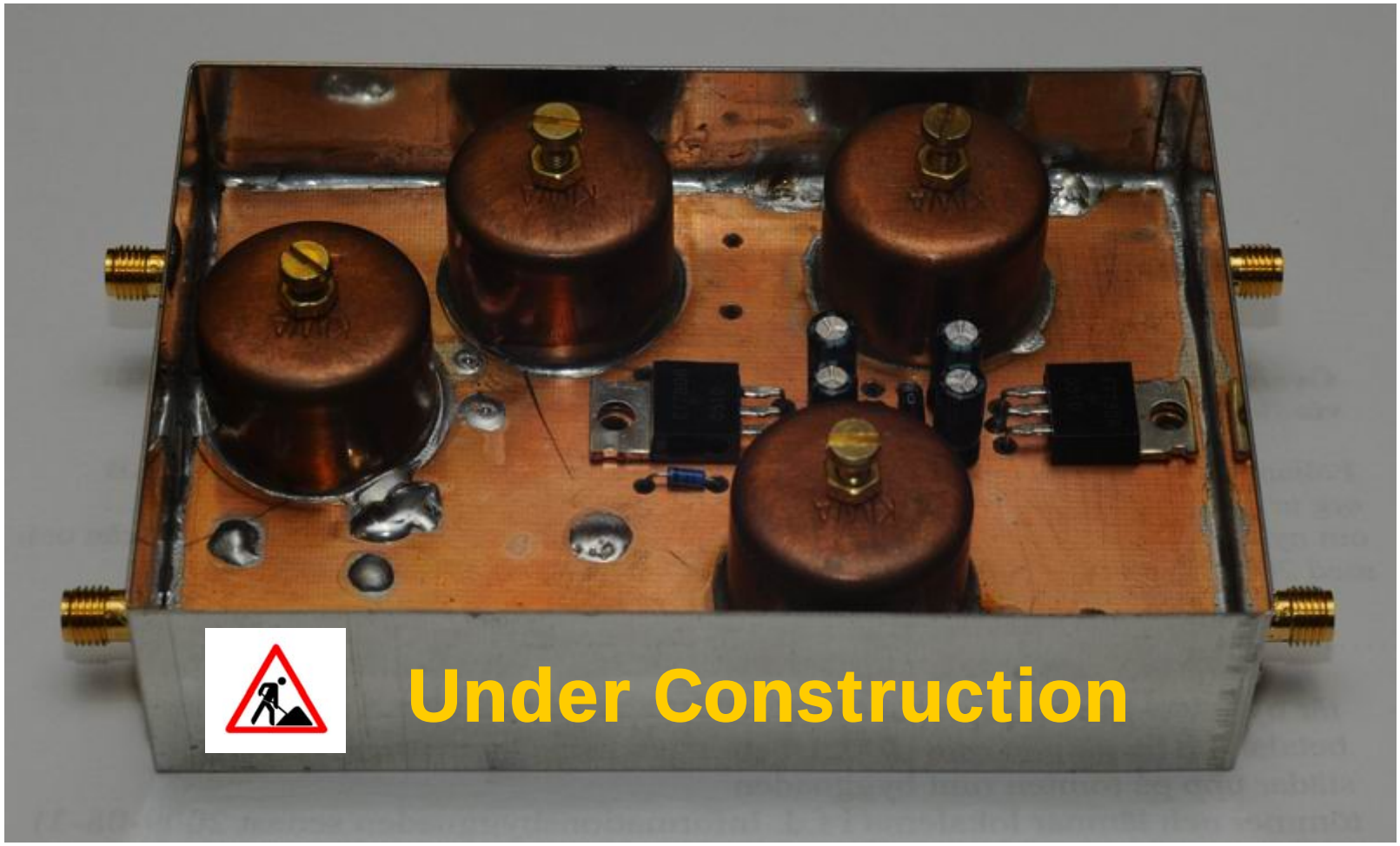

Transverter core for 5760 MHz

- Modified 13 cm transverter
  - Filters changed from helix to pipecap
  - Extra LO doubler and amplifier
  - T/R Splitter instead of PIN switch

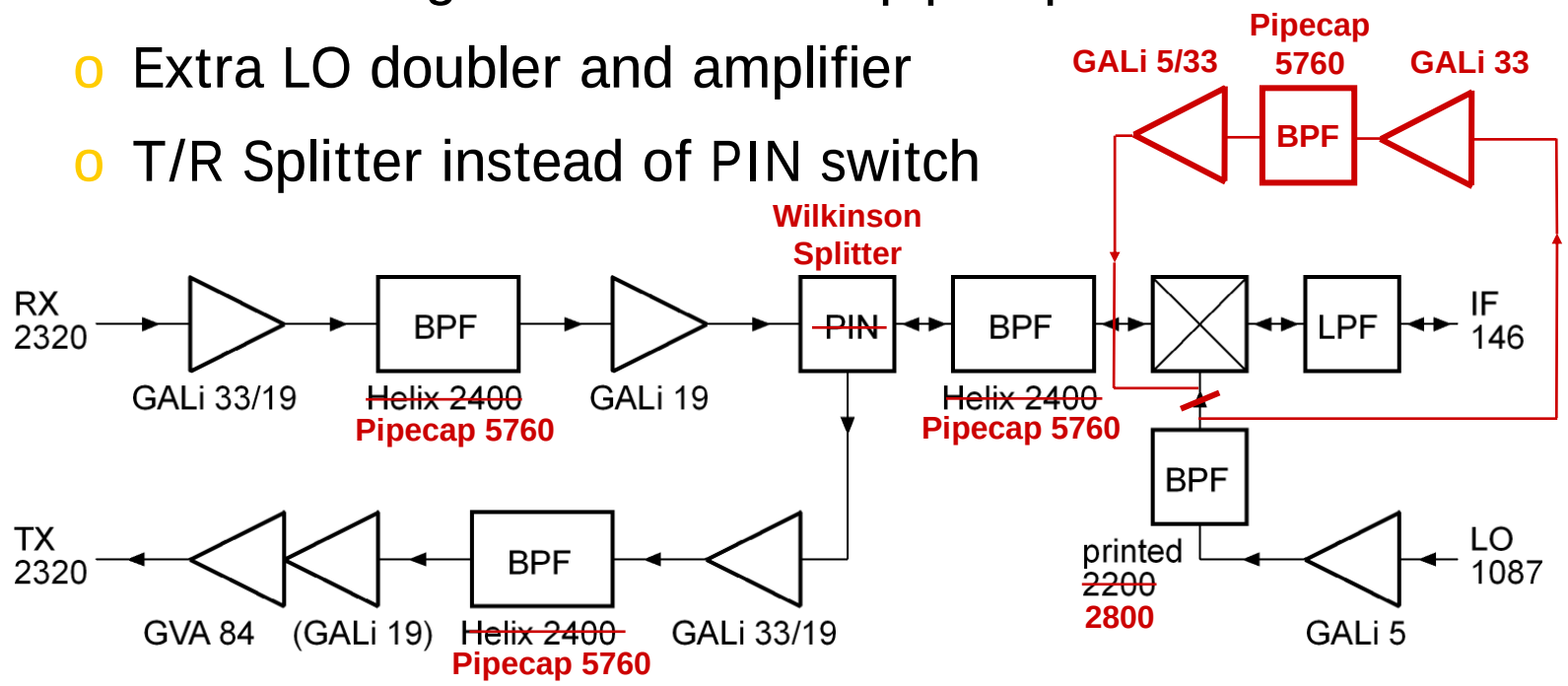

PCB layout 6 cm transverter

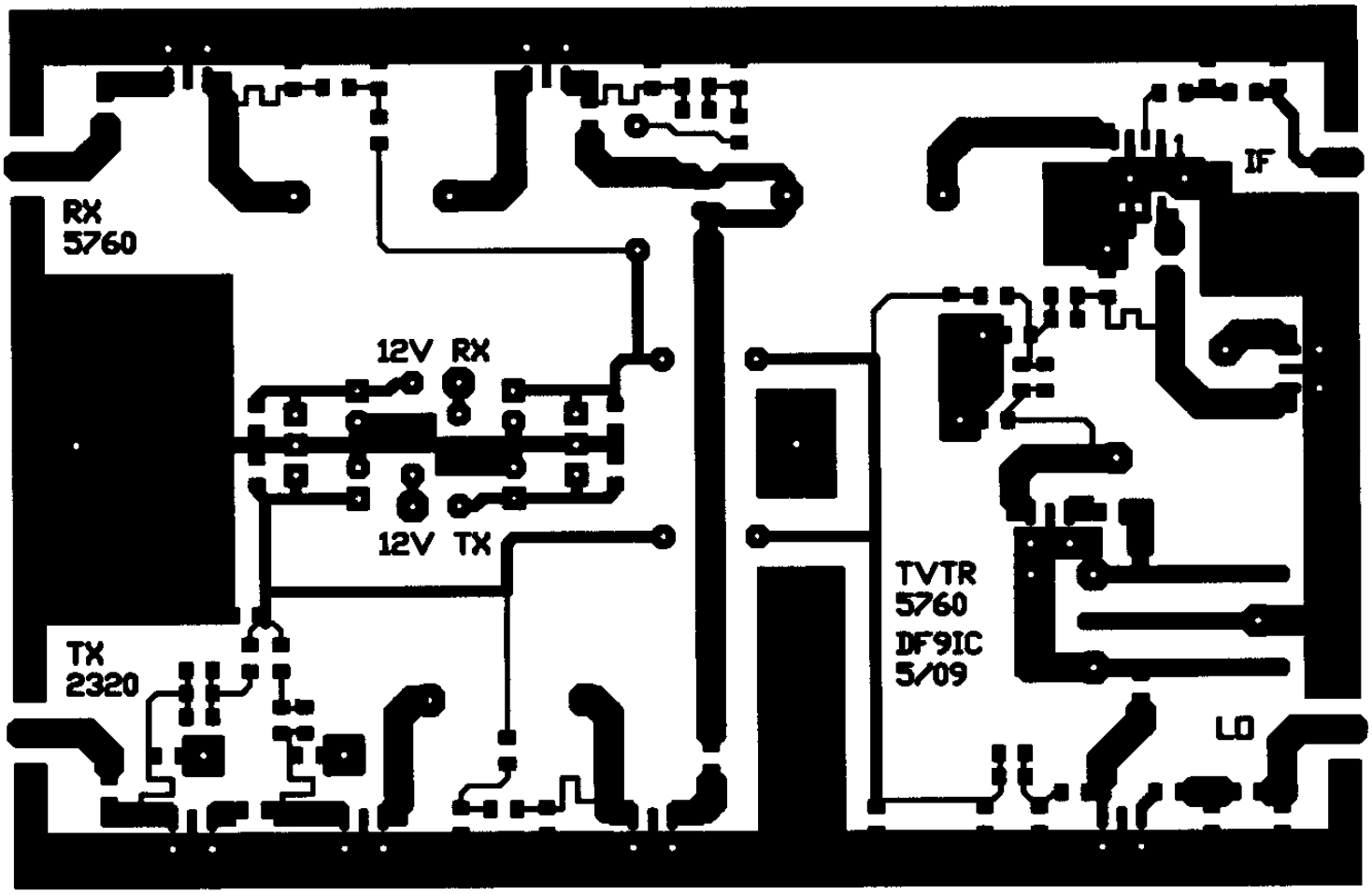

FR4 1,5 mm 74 x 111

Spectrum at LO x3

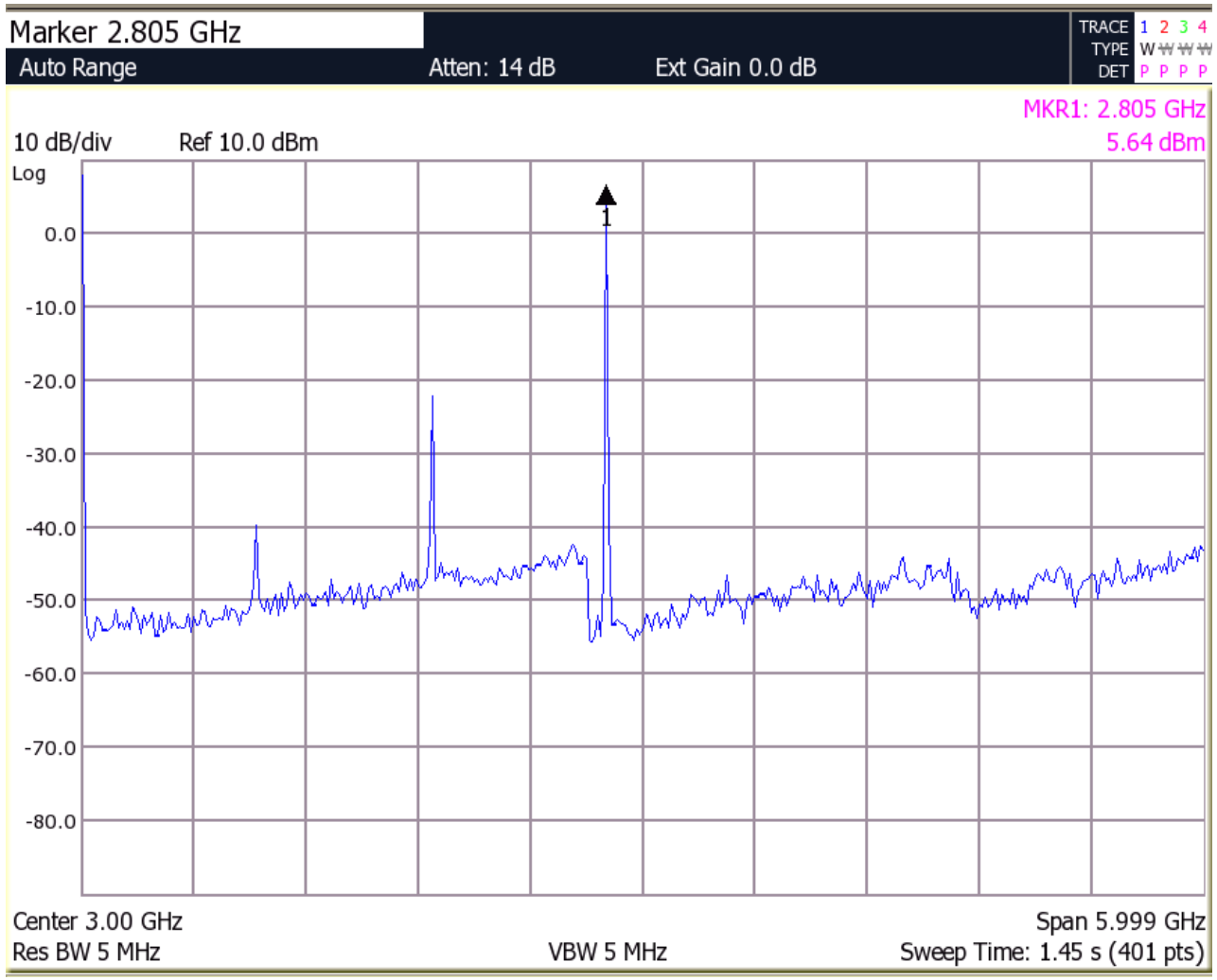

Spectrum at LO x3 x2

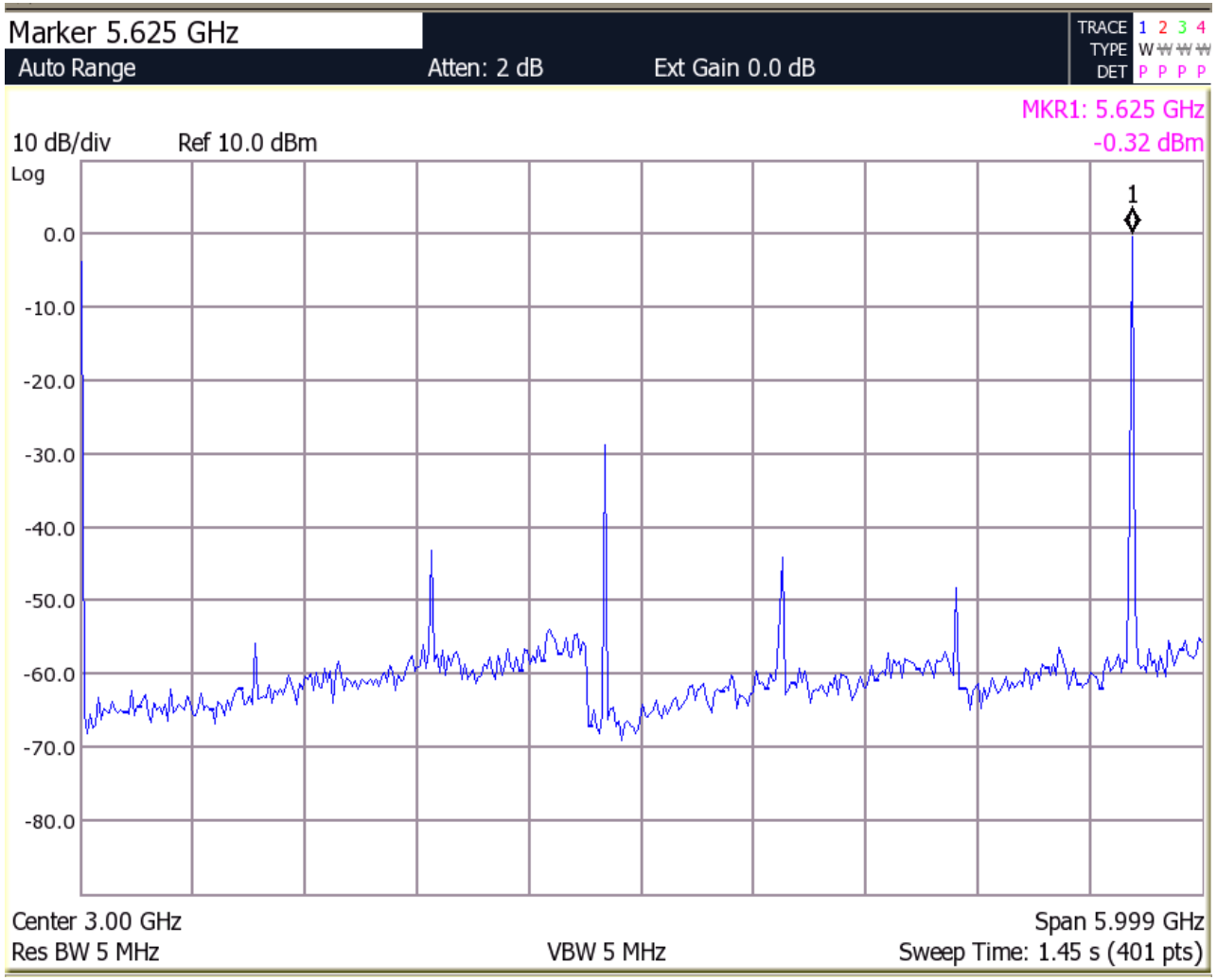

Spectrum at LO input of mixer

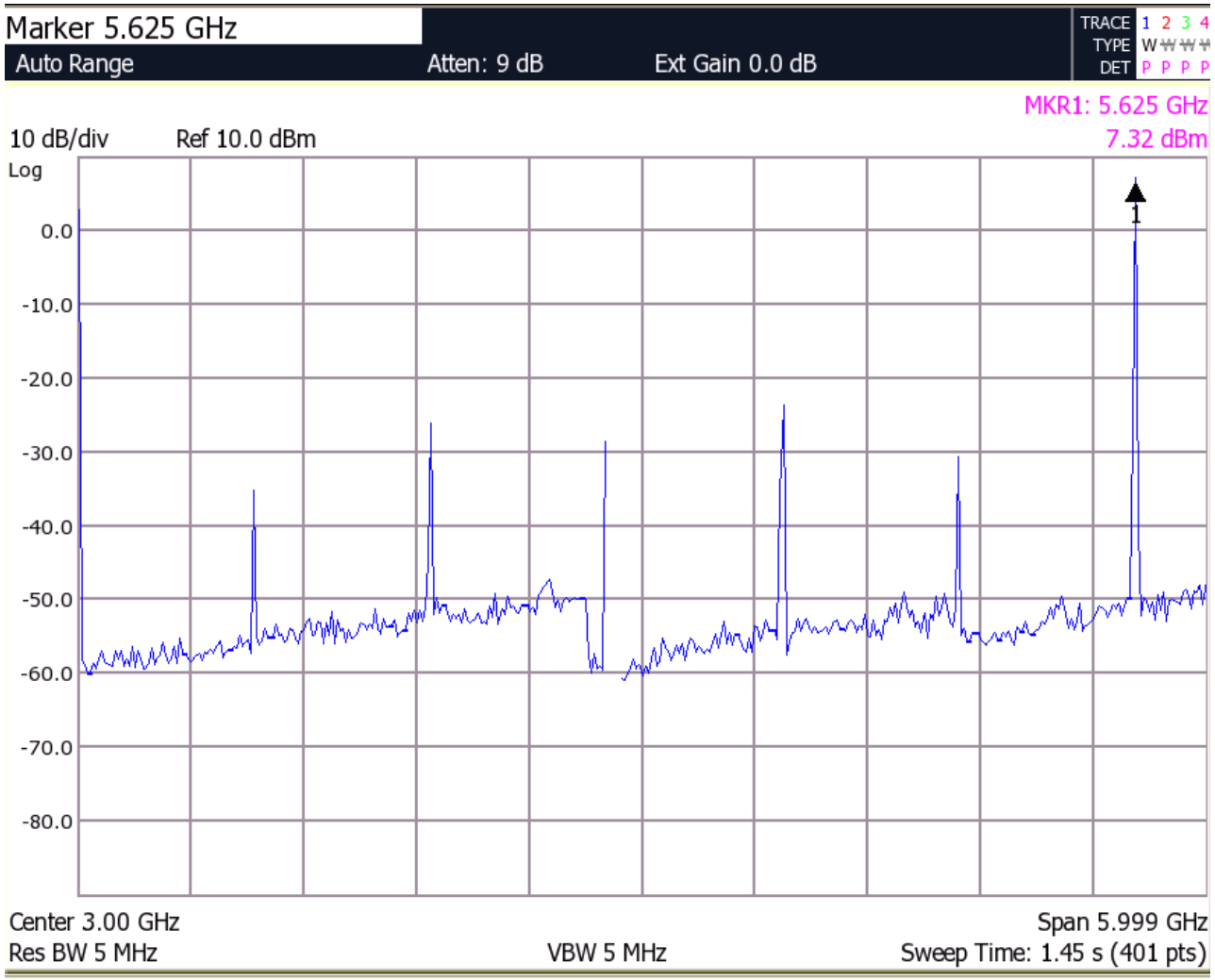

Content

- Multiband transverter systems
- Filters and multiplexers
- PLL-disciplined oscillators
- Transverters
- 2320 MHz transverter core
- 5760 MHz transverter core
- Further modules (planned)
- Conclusion

Further modules (planned)

- 9 cm transverter core:
  like 6 cm, different LO path without 2nd multiplier stage
- 23 cm transverter core:
  LO driver for +17 dBm mixer, 2 stage TX amp, otherwise similar to 13 cm transverter
- IF interface
- Control board and telemetry system
- (PAs and preamps from existing designs)

Conclusion

- A modular approach may suit better the needs of a multiband transverter system for use at home on 23/13/9/6 cm
- Masthead preamps and PAs should be combined with basic transverters in the shack
- Some of the necessary modules have been realized, others are in development or planned